# DT3-B291

パーツブック
PARTS BOOK
TEILEKATALOG
LIVRE DES PIECES
LIBRO DE REFERENCIA DE PIEZAS

筒型針送り二重環縫ミシン

CYLINDER BED NEEDLE FEED DOUBLE CHAIN STITCHER

ZYLINDERBETT-DOPPELKETTENSTICHMASCHINE MIT NADELTRANSPORT

MACHINE CEINTUREUSE CANON DOUBLE ENTRAINEMENT POINT DE CHAINETTE DOUBLE

MAQUINA CILINDRICA DOBLE CADENETA ALIMENTACION POR DIENTE

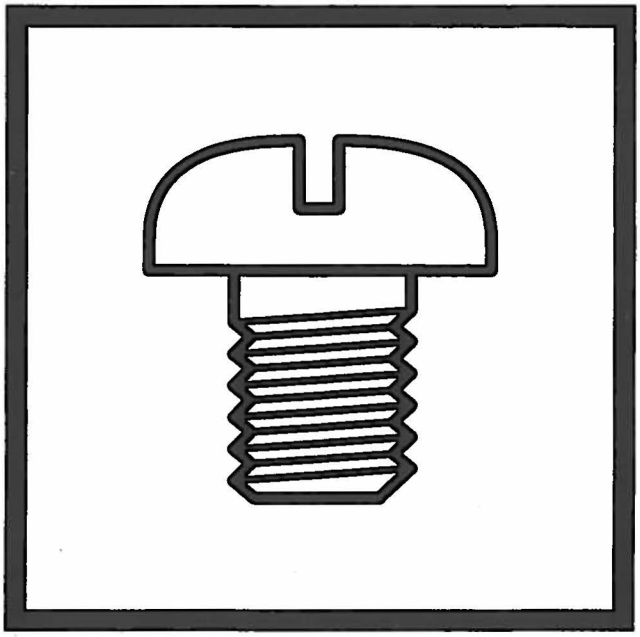

brother

From the library of: Superior Sewing Machine & Supply LLC

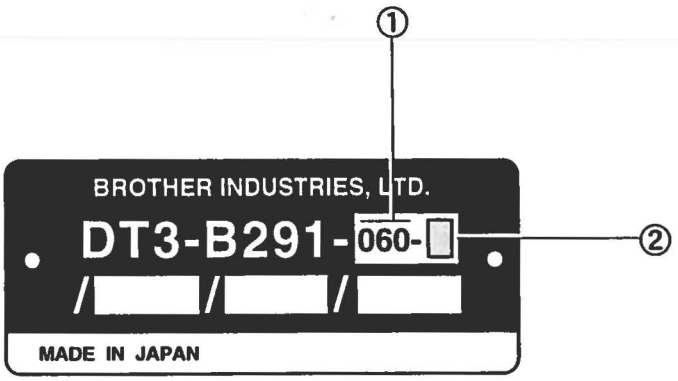


① … サブクラス 060 : 厚物ウエストバンド縫製用
Sub-class 060 : For sewing waist bands on heavy-weight materials

② … 針数、針幅
7 : 針数 (2本)、針幅 31.8mm
7 : No. of needles (2), Needle gauge 31.8mm

8 : 針数 (2本)、針幅 34.9mm
8 : No. of needles (2), Needle gauge 34.9mm

A : 針数 (4本)、針幅 6.4-25.4-6.4mm
A : No. of needles (4), Needle gauge 6.4-25.4-6.4mm

From the library of: Superior Sewing Machine & Supply LLC

# Model Plate Conversion Table

2002.04.01

| Old Model Plate | New Model Plate |
|---|---|
| DT3-B291-060-7 | DC-2910-60-2E1A14 |
| DT3-B291-060-8 | DC-2910-60-2E1A38 |
| DT3-B291-060-A | DC-2910-60-4U1401 |

brother

·From the library of: Superior Sewing Machine & Supply LLC

From the library of: Superior Sewing Machine & Supply LLC

# パーツブックご利用に際して

1. この本は、2001年7月のデータに基づいて作成されたものです。
2. 部品は予告なしに設計変更される場合があります。
3. 組単位で補給する部品は、[- - - -]破線で示しております。

# 目　　次


A. 主体関係 ..... 1
B. 上軸関係 ..... 5
C. 針棒揺動関係 ..... 5
D. 針冷却関係 ..... 7
E. 押工関係 ..... 7
F. 送り関係 ..... 9
G1. ゲージ関係 ..... 13
G2. ゲージ関係 ..... 15
H. 下軸関係 ..... 17
J. ルーパー関係 ..... 17
K. 給油潤滑関係 ..... 19
L1. 糸調子関係 ..... 23
L2. 糸調子関係 ..... 25
M. リテーナ関係 ..... 27
N. 針位置検出器関係 ..... 27
P. チェンカッタ·クリーナー装置(オプション部品) ..... 29
Q1. エアー押工上ゲ関係(オプション部品) ..... 31
Q2. エアー押工上ゲ関係(オプション部品) ..... 33
Z1. 付属品関係 ..... 35
Z2. 付属品関係 ..... 37
Ga. ゲージ部品一覧表 ..... 40
Wa. 警告ラベル ..... 41
索引 ..... 42


From the library of: Superior Sewing Machine & Supply LLC

# Notes for using this parts book

1. This book was prepared based on information available in July 2001.
2. Parts are subject to changes in design without prior notice.
3. Parts supplied as complete assemblies are circled by a dotted line [ ] .

## CONTENTS


A. Machine body ..... 1
B. Upper shaft mechanism ..... 5
C. Needle bar rocking mechanism ..... 5
D. Needle cooler ..... 7
E. Presser foot mechanism ..... 7
F. Feed mechanism ..... 9
G1. Gauge parts ..... 13
G2. Gauge parts ..... 15
H. Lower shaft mechanism ..... 17
J. Looper mechanism ..... 17
K. Lubrication ..... 19
L1. Thread tension ..... 23
L2. Thread tension ..... 25
M. Retainer mechanism ..... 27
N. Synchronizer ..... 27
P. Chain cutter and cleaner device (Option parts) ..... 29
Q1. Pneumatic presser foot lifting mechanism (Option parts) ..... 31
Q2. Pneumatic presser foot lifting mechanism (Option parts) ..... 33
Z1. Accessories ..... 35
Z2. Accessories ..... 37
Ga. GAUGE PARTS LIST ..... 40
Wa. Warning labels ..... 41
INDEX ..... 42




From the library of: Superior Sewing Machine & Supply LLC

# Hinweise zur Verwendung dieser Teileliste

1. Dieses Buch basiert auf den Informationen vom Juli 2001.
2. Modelländerungen sind vorbehalten.
3. Die Teile, die als kompletter Satz geliefert werden, sind mit einer [ ] gestrichelten Linie umrandet.

## INHALTSVERZEICHNIS


A. Maschinengehäuse ..... 1
B. Obere Welle ..... 5
C. Nadelstangenbetätigung ..... 5
D. Nadelkühlungsvorrichtung ..... 7
E. Stoffdrückerfuß ..... 7
F. Transportvorrichtung ..... 9
G1. Lehren ..... 13
G2. Lehren ..... 15
H. Untere Welle ..... 17
J. Greifer ..... 17
K. Schmierung ..... 19
L1. Faderspannung ..... 23
L2. Faderspannung ..... 25
M. Haltevorrichtung ..... 27
N. Synchronisator ..... 27
P. Kettenstich-fadenabschneider (Sonderzubehör) ..... 29
Q1. Pneumatische stoffdrückerfußanhebevorrichtung (Sonderzubehör) ..... 31
Q2. Pneumatische stoffdrückerfußanhebevorrichtung (Sonderzubehör) ..... 33
Z1. Zubehör ..... 35
Z2. Zubehör ..... 37
Ga. LEHRENLISTE ..... 40
Wa. Warnschilder ..... 41
VERZEICHNIS ..... 42




From the library of: Superior Sewing Machine & Supply LLC

# Notes sur l'utilisation de ce manuel de pièces détachées

1. Ce manuel a été fait d'après les renseignements valables au mois de Juillet 2001.
2. Les pièces peuvent être sujettes à des modifications sans préavis.
3. Les pièces fournies en tant qu'assemblages complets sont encadrées avec un trait pointillé [- - - - -].

## TABLE DES MATIERES


A. Corps de la machine ..... 1
B. Mécanisme de l'arbre supérieur ..... 5
C. Mécanisme de balancement de la barre à aiguille .... 5
D. Mécanisme du refroidisseur d'aiguille ..... 7
E. Mécanisme de pied presseur ..... 7
F. Mécanisme de l'entraînement ..... 9
G1. Pièces du jauge ..... 13
G2. Pièces du jauge ..... 15
H. Mécanisme de l'arbre inférieur ..... 17
J. Mécanisme des griffes ..... 17
K. Lubrification ..... 19
L1. Tension du fil ..... 23
L2. Tension du fil ..... 25
M. Mécanisme de retenue ..... 27
N. Synchronisateur ..... 27
P. Coupe-chaînette et despositif de nettoyge (Pièces en option) ..... 29
Q1. Dispositif pneumatique de releveur de pied presseur (Pièces en option) ..... 31
Q2. Dispositif pneumatique de releveur de pied presseur (Pièces en option) ..... 33
Z1. Accessoires ..... 35
Z2. Accessoires ..... 37
Ga. LISTE DES PIECES D' ECARTEMENT ..... 40
Wa. Etiquettes d'avertissement ..... 41
INDEX ..... 42




From the library of: Superior Sewing Machine & Supply LLC

# Notas para usar este Manual de Piezas

1. Este libro ha sido compilado basándose en los datos de que se disponía en julio 2001.
2. Las piezas quedan sujetas a cambios de diseño sin aviso previo.
3. Las piezas suministradas como conjuntos completos se enmarcan con una línea punteada [-----] .

## INDICE


A. Cuerpo de la máquina ..... 1
B. Mecanismo del eje superior ..... 5
C. Mecanismo de oscilación de la barra de aguja ..... 5
D. Mecanismo del enfriador de aguja ..... 7
E. Mecanismo de la prensa tela ..... 7
F. Mecanismo de la alimentación ..... 9
G1. Piezas de calibradores ..... 13
G2. Piezas de calibradores ..... 15
H. Mecanismo del eje inferior ..... 17
J. Mecanismo del presilladora ..... 17
K. Lubricación ..... 19
L1. Tensión del hilo ..... 23
L2. Tensión del hilo ..... 25
M. Mecanismo del retenedor ..... 27
N. Sincronizador ..... 27
P. Cortacadeneta y dispositivo de limpieza (Piezas opcionales) ..... 29
Q1. Levantador neumático del prensatelas (Piezas opcionales) ..... 31
Q2. Levantador neumático del prensatelas (Piezas opcionales) ..... 33
Z1. Accesorios ..... 35
Z2. Accesorios ..... 37
Ga. LISTA DE PIEZAS DE CALIBRADORES ..... 40
Wa. Etiquetas de advertencia ..... 41
INDICE ..... 42


From the library of: Superior Sewing Machine & Supply LLC

# A . 主体関係 / Machine body / Maschinengehäuse / Corps de la machine / Cuerpo de la máquina

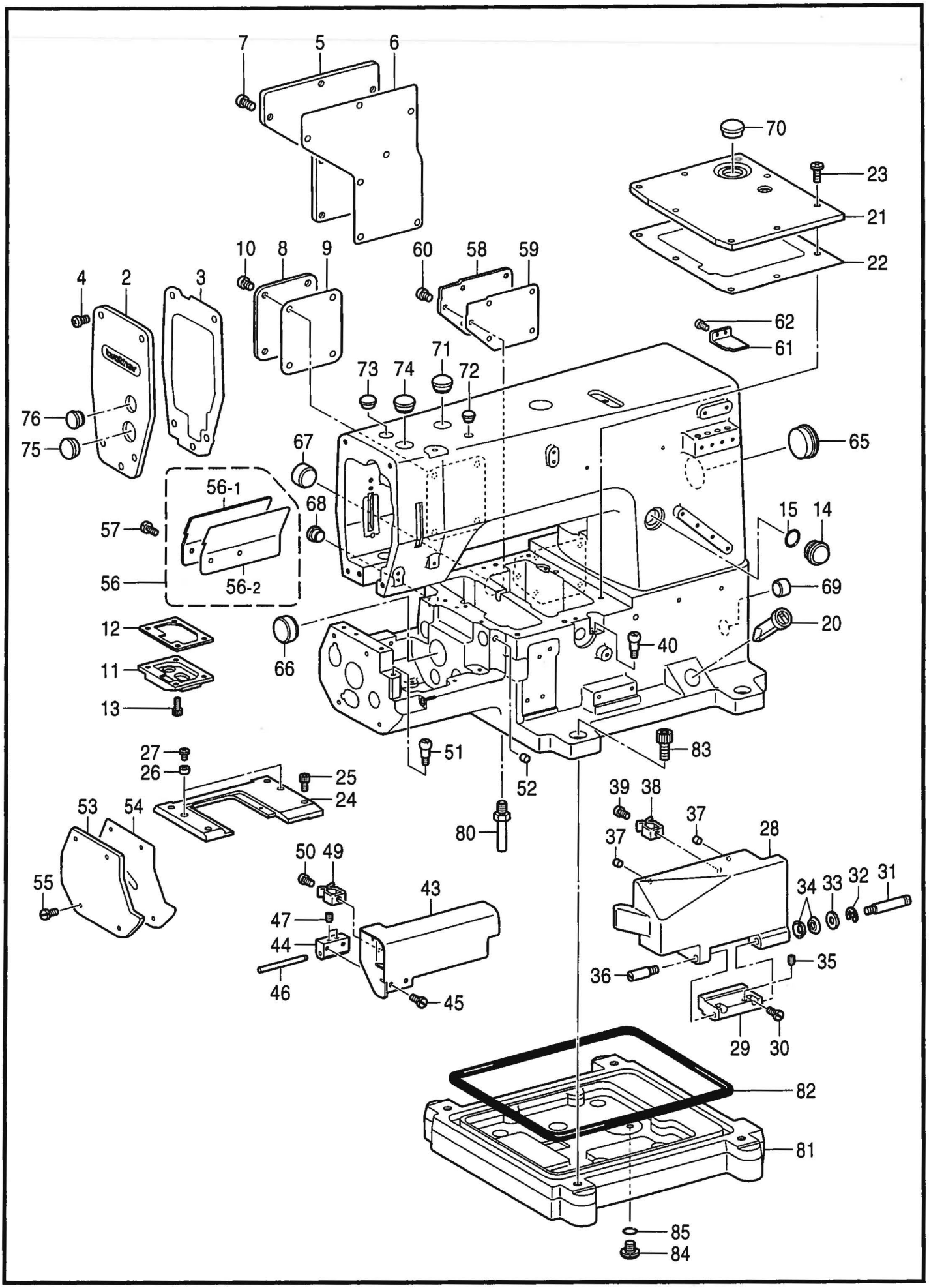


118-291-050



From the library of: Superior Sewing Machine & Supply LLC

| REF.NO. | CODE | Q'TY | ヒンメイ | NAME OF PARTS | RM |
|---|---|---|---|---|---|
| 2 | S51503001 | 1 | メンイタ | FACE PLATE | |
| 3 | S51504000 | 1 | メンイタパツキン | PACKING, ;F-PLATE | |
| 4 | 062681012 | 5 | ナベコ437-40X10 | SCREW, PAN SM4.37-40X10 | |
| 5 | S02499009 | 1 | ガワイタ | REAR COVER | |
| 6 | S02605000 | 1 | ガワイタパツキン | PACKING, ;R-COVER | |
| 7 | 062681012 | 7 | ナベコ437-40X10 | SCREW, PAN SM4.37-40X10 | |
| 8 | S51505001 | 1 | アームウシロフタ | ARM COVER, ;REAR | |
| 9 | S51506000 | 1 | アームウシロフタパツキン | PACKING, ;A-COVER | |
| 10 | 062680812 | 4 | ナベコ437-40X8 | SCREW, PAN SM4.37-40X8 | |
| 11 | S51507001 | 1 | ダストプレート | DUST PLATE | |
| 12 | S51508000 | 1 | ダストプレートパツキン | PACKING, ;D-PLATE | |
| 13 | 018680832 | 4 | アナボルト4.37X8 | BOLT, SOCKET SM4.37X8 | |
| 14 | S02606000 | 1 | ユリヨウケイマド | OIL GAUGE WINDOW | |
| 15 | 081014670 | 1 | Oリング PW14 | O RING, PW14 | |
| 20 | 148084001 | 1 | オイルゲージマド | OIL GAUGE WINDOW | |
| 21 | S51509101 | 1 | クロスプレート | CLOTH PLATE | |
| 22 | S51510100 | 1 | クロスプレートパツキン | PACKING, ;C-PLATE | |
| 23 | 060681212 | 8 | バインド437-40X12 | SCREW, BIND SM4.37-40X12 | |
| 24 | S51511101 | 1 | ハリイタササエイタ | SUPPORT PLATE, ;N-PLATE | |
| 25 | 018681032 | 4 | アナボルト4.37X10 | BOLT, SOCKET SM4.37X10 | |
| 26 | S28075001 | 2 | ハリイタササエイタカラー | COLLAR | |
| 27 | 060670812 | 2 | バインド357-40X8 | SCREW, BIND SM3.57-40X8 | |
| 28 | S51512001 | 1 | マエカバー | FRONT COVER | |
| 29 | S28031001 | 1 | マエカバーササエ | SUPPORT, ;F-COVER | |
| 30 | 102424004 | 2 | シメネジ4.37 | SCREW, SM4.37-40X23 | |
| 31 | S28032001 | 1 | マエカバーササエジクR | SUPPORT SHAFT, R ;F-COVER | |
| 32 | 048040342 | 1 | トメワE4 | RETAINING RING, E4 | |
| 33 | 025050132 | 1 | ヒラザガネシヨウ5 | WASHER, PLAIN S 5 | |
| 34 | 146598001 | 2 | バネザガネ | WASHER, BOWL SPRING | |
| 35 | 151603002 | 1 | トメネジ4.37 | SET SCREW, SM4.37 | |
| 36 | S28033000 | 1 | マエカバーササエジクL | SUPPORT SHAFT, L ;F-COVER | |
| 37 | 142274101 | 2 | ゴムセン4.2 | RUBBER CAP, 4.2 | |
| 38 | S28034101 | 1 | カバートメバネ | SETTING SPRING, ;COVER | |
| 39 | 062710612 | 1 | ナベコ476-32X6 | SCREW, PAN SM4.76-32X6 | |
| 40 | S28035001 | 1 | バネウケネジ | SCREW, ;SPRING HOLDER | |
| 43 | S51513101 | 1 | マエカバーS | FRONT COVER, S | |
| 44 | S51514001 | 1 | マエカバーSドダイ | BASE, ;F-COVER (S) | |
| 45 | 106629002 | 2 | シメネジ4.37 | SCREW, SM4.37 | |
| 46 | S51515000 | 1 | マエカバーSジク | SHAFT, ;F-COVER (S) | |
| 47 | 151603002 | 2 | トメネジ4.37 | SET SCREW, SM4.37 | |
| 49 | S28034101 | 1 | カバートメバネ | SETTING SPRING, ;COVER | |
| 50 | 062710612 | 1 | ナベコ476-32X6 | SCREW, PAN SM4.76-32X6 | |
| 51 | S28035001 | 1 | バネウケネジ | SCREW, ;SPRING HOLDER | |
| 52 | 142274101 | 1 | ゴムセン4.2 | RUBBER CAP, 4.2 | |
| 53 | S51517001 | 1 | ヨコフタ | SIDE COVER | |
| 54 | S51518100 | 1 | ヨコフタパツキン | PACKING, ;S-COVER | |
| 55 | 106629002 | 4 | シメネジ4.37 | SCREW, SM4.37 | |
| 56 | S51523001 | 1 | シリンダウシロフタクミ | COVER ASSY, R | |
| 56-1 | S51519001 | 1 | シリンダウシロフタ | COVER, R ;CYLINDER | |
| 56-2 | S51524000 | 1 | シリンダウシロフタパツキン | PACKING | |
| 57 | 106629002 | 2 | シメネジ4.37 | SCREW, SM4.37 | |
| 58 | S51520001 | 1 | ベツドウシロフタ | COVER, R ;BED | |
| 59 | S51521000 | 1 | ベツドウシロフタパツキン | PACKING, ;B-COVER (R) | |
| 60 | 062680812 | 5 | ナベコ437-40X8 | SCREW, PAN SM4.37-40X8 | |
| 61 | S51525001 | 1 | オイルヨケイタ | OIL GUARD | |
| 62 | 062670512 | 2 | ナベコ357-40X5 | SCREW, PAN SM3.57-40X5 | |
| 65 | S28043001 | 1 | ゴムセン32.8 | RUBBER CAP, 32.8 | |
| 66 | 116725001 | 1 | ゴムセン25.5 | RUBBER CAP, 25.5 | |
| 67 | S28044001 | 1 | ゴムセン20.8 | RUBBER CAP, 20.8 | |



From the library of: Superior Sewing Machine & Supply LLC

A . 主体関係 / Machine body / Maschinengehäuse / Corps de la machine / Cuerpo de la máquina

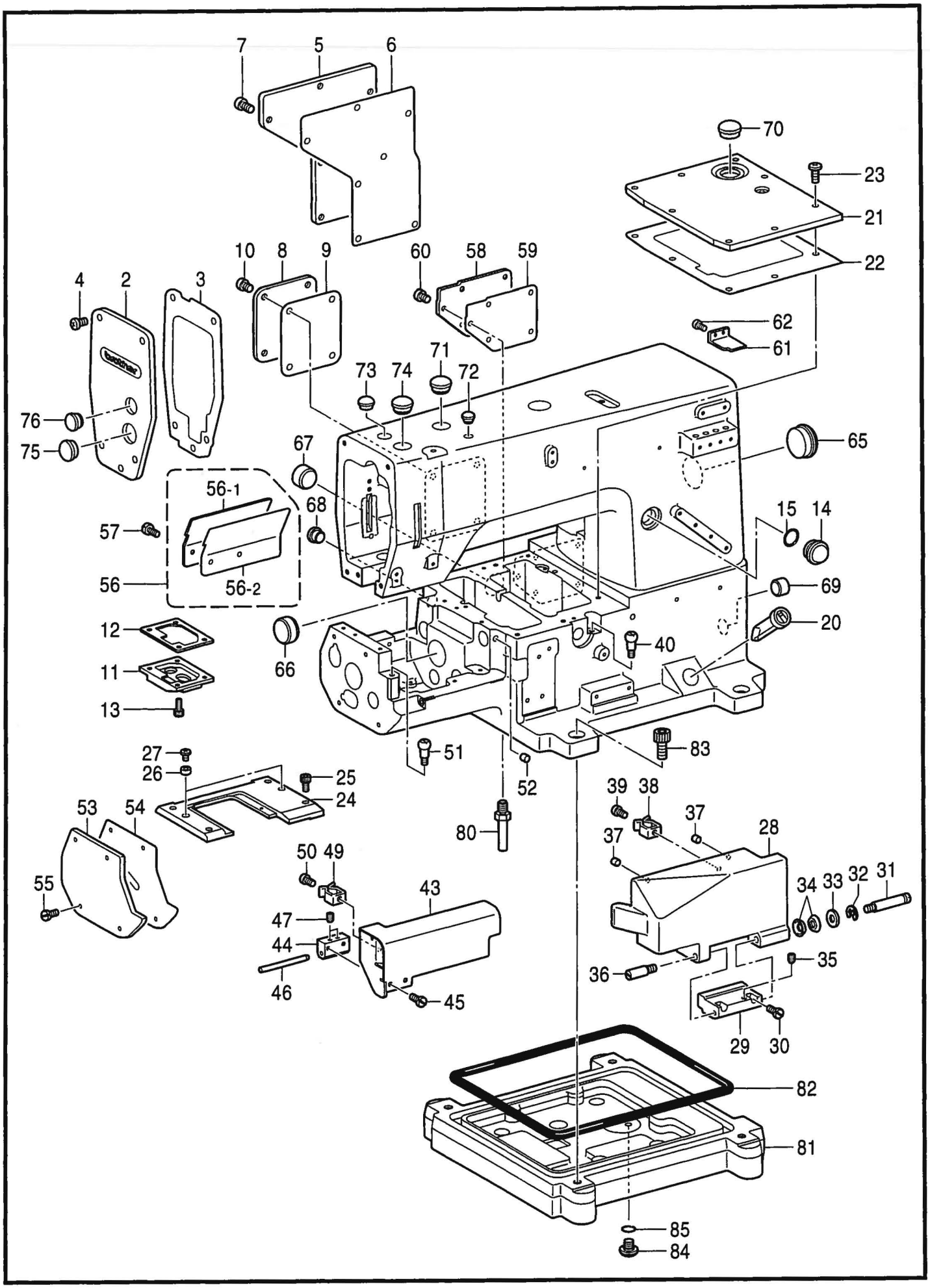


118-291-050



From the library of: Superior Sewing Machine & Supply LLC

| REF.NO. | CODE | Q'TY | ヒンメイ | NAME OF PARTS | RM |
|---|---|---|---|---|---|
| 68 | S44010101 | 1 | ゴムセン11.5 | RUBBER CAP, 11.5 | |
| 69 | 156887001 | 1 | ゴムセン17.5 | RUBBER CAP, 17.5 | |
| 70 | 159150000 | 1 | ゴムセン20.5 | RUBBER CAP, 20.5 | |
| 71 | 104449001 | 1 | ゴムセン15.5 | RUBBER CAP, 15.5 | |
| 72 | 104450101 | 1 | ゴムセン8 | RUBBER CAP, 8 | |
| 73 | 117936001 | 1 | ゴムセン9.4 | RUBBER CAP, 9.4 | |
| 74 | 104449001 | 1 | ゴムセン15.5 | RUBBER CAP, 15.5 | |
| 75 | 159150000 | 1 | ゴムセン20.5 | RUBBER CAP, 20.5 | |
| 76 | 104449001 | 1 | ゴムセン15.5 | RUBBER CAP, 15.5 | |
| 80 | 104830101 | 4 | キヤクチユウS | BED LEG, S | |
| 81 | S28045000 | 1 | アブラウケ | OIL RESERVOIR | |
| 82 | S28046000 | 1 | Oリング | O RING | |
| 83 | 018081632 | 4 | アナボルト8X16 | BOLT, SOCKET M8X16 | |
| 84 | 110641002 | 1 | ダンネジ9.52 | STUD SCREW, SM9.52 | |
| 85 | 109203001 | 1 | Oリング | O RING | |



From the library of: Superior Sewing Machine & Supply LLC

B . 上軸関係 / Upper shaft mechanism / Obere Welle / Mécanisme de l´árbre supérieur / Mecanismo del eje superior

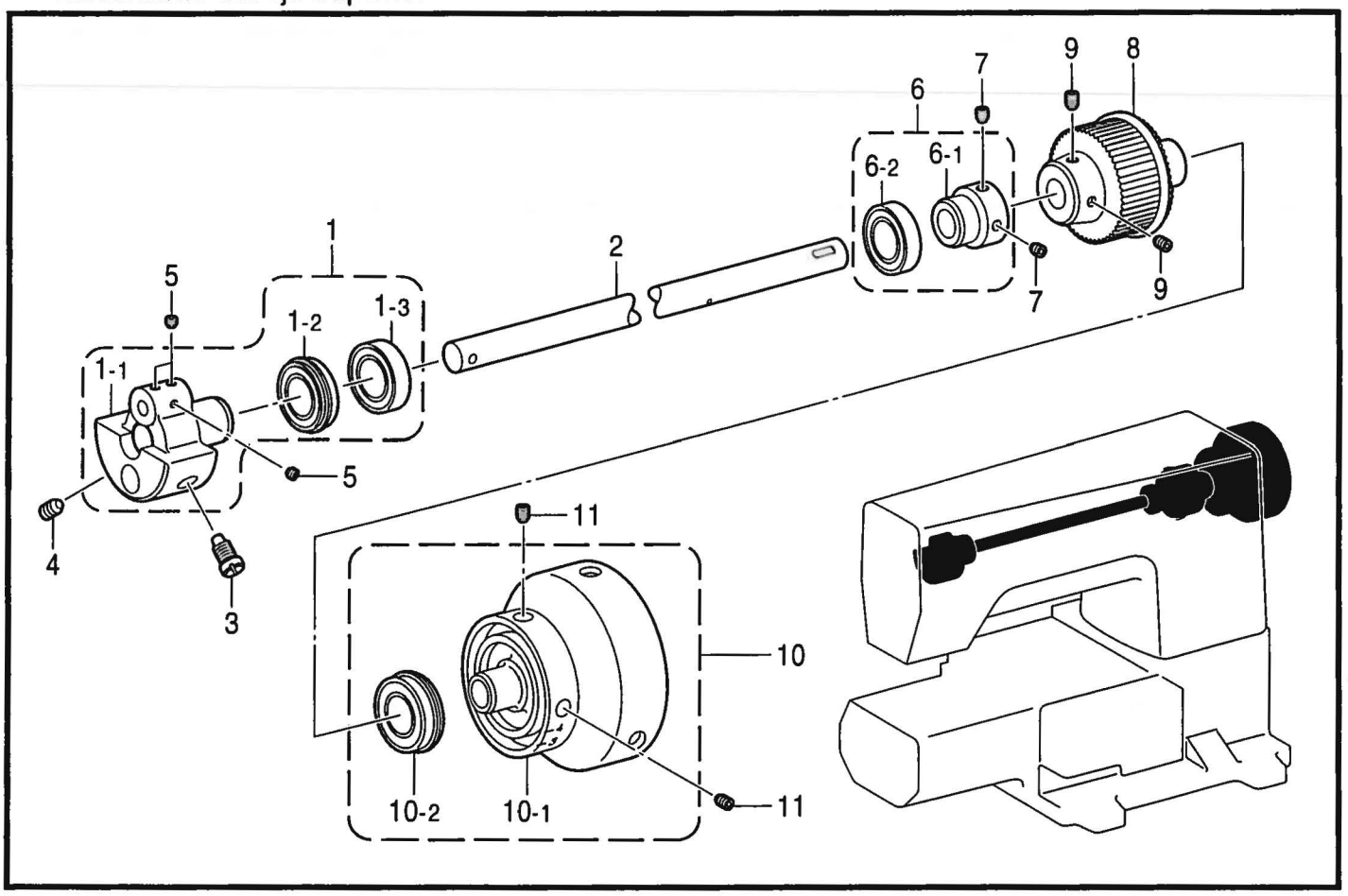


118-291-109

C . 針棒揺動関係 / Needle bar rocking mechanism / Nadelstangenbetätigung / Mécanisme de balancement de la barre à aiguille / Mecanismo de oscilación de la barra de aguja

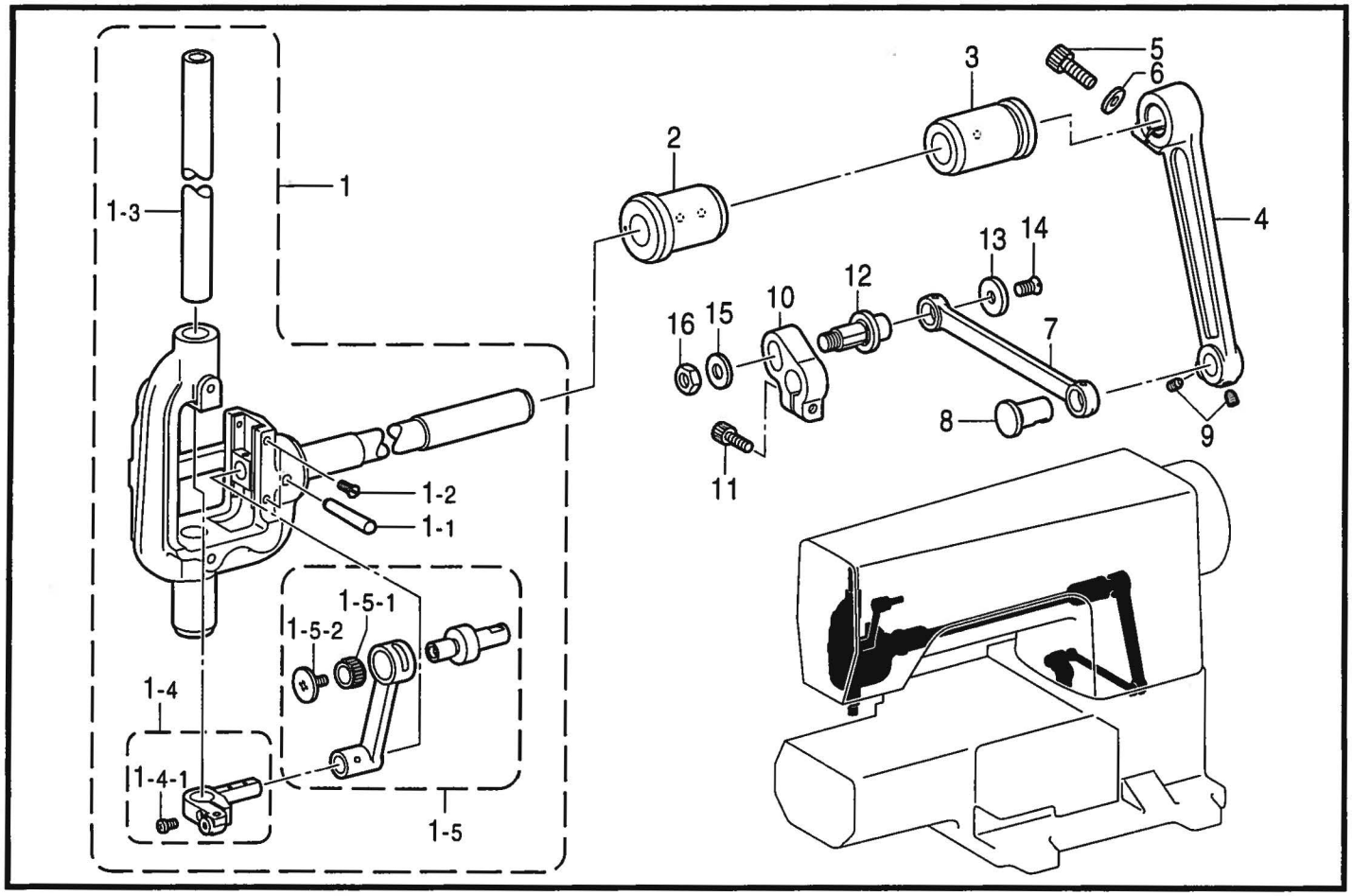


118-291-115



From the library of: Superior Sewing Machine & Supply LLC

B．上軸関係 / Upper shaft mechanism / Obere Welle / Mécanisme de l'arbre supérieur / Mecanismo del eje superior

| REF.NO. | CODE | Q'TY | ヒンメイ | NAME OF PARTS | RM |
|---|---|---|---|---|---|
| 1 | S51530101 | 1 | ハリボウクランククミ | NEEDLE BAR CRANK ASSY | |
| 1-1 | S12726151 | 1 | ハリボウクランク | NEEDLE BAR CRANK | |
| 1-2 | S38707001 | 1 | タマジクウケ6004ZZNR | BALL BEARING, 6004ZZNR | |
| 1-3 | S25234001 | 1 | タマジクウケ6004ZZ | BALL BEARING, 6004ZZ | |
| 2 | S51531001 | 1 | ウワジク | UPPER SHAFT | |
| 3 | 104464001 | 1 | シメネジ7.14 | SCREW, SM7.14-28 | |
| 4 | 014770632 | 1 | アナクボミ635-40X6 | SET SCREW, SOCKET(CP) SM6.35X6 | |
| 5 | 152718001 | 3 | アナトメネジ5.95 | SET SCREW, SOCKET SM5.95X5 | |
| 6 | S51532001 | 1 | タマジクウケクミ | BALL BEARING ASSY | |
| 6-1 | S51533001 | 1 | タマジクウケブシユ | BUSH, ;B-BEARING | |
| 6-2 | 076023800 | 1 | タマジクウケ60/22ZZ | BALL BEARING, 60/22ZZ | |
| 7 | 014770632 | 2 | アナクボミ635-40X6 | SET SCREW, SOCKET(CP) SM6.35X6 | |
| 8 | S38245051 | 1 | タイミングプーリDクミ | TIMING PULLEY ASSY, D | |
| 9 | 014771032 | 2 | アナクボミ635-40X10 | SET SCREW, SOCKET(CP)SM6.35X10 | |
| 10 | S51534101 | 1 | プーリクミ | PULLEY ASSY | |
| 10-1 | S51535101 | 1 | プーリ | PULLEY | |
| 10-2 | 158115001 | 1 | タマジクウケ6204ZZNR | BALL BEARING, 6204ZZNR | |
| 11 | 014761030 | 2 | アナクボミ595-28X10 | SET SCREW, SOCKET(CP)SM5.95X10 | |

118-291-109

C．針棒揺動関係 / Needle bar rocking mechanism / Nadelstangenbetätigung / Mécanisme de balancement de la barre à aiguille / Mecanismo de oscilación de la barra de aguja

| REF.NO. | CODE | Q'TY | ヒンメイ | NAME OF PARTS | RM |
|---|---|---|---|---|---|
| 1 | S51536101 | 1 | ハリボウヨウドウジククミ | ROCKER SHAFT ASSY, ;N-BAR | |
| 1-1 | S30570001 | 1 | テーパピン4X25 | PIN, TAPER 4X25 | |
| 1-2 | 102731004 | 4 | サラネジ2.38 | SCREW, FLAT SM2.38-56X4.5 | |
| 1-3 | S51537001 | 1 | ハリボウ | NEEDLE BAR | |
| 1-4 | S51538001 | 1 | ハリボウダキネジツキ | NEEDLE BAR CLAMP, W/SCREW | |
| 1-4-1 | 062670812 | 1 | ナベコ3.57-40X8 | SCREW, PAN SM3.57-40X8 | |
| 1-5 | S51540001 | 1 | ハリボウレンカンクミ | CONNECTING ROD ASSY, ;N-BAR | |
| 1-5-1 | S09120001 | 1 | ニードルジクウケ | NEEDLE ROLLER BEARING | |
| 1-5-2 | 145465001 | 1 | シメネジ3.57L | SCREW, SM3.57-40X6 L | |
| 2 | S51543001 | 1 | ヨウドウジクメタルL | BUSH, L ;R-SHAFT | |
| 3 | S51544001 | 1 | ヨウドウジクメタルR | BUSH, R ;R-SHAFT | |
| 4 | S51545001 | 1 | ハリボウヨウドウレンカン | ROCKER CONNECTING ROD | |
| 5 | 149569001 | 1 | アナボルト6.35 | BOLT, SOCKET SM6.35 | |
| 6 | 118735002 | 1 | ザガネ | WASHER, PLAIN | |
| 7 | 112596101 | 1 | ハリボウヨウドウリンク | ROCKER LINK, N-BAR | |
| 8 | S51546001 | 1 | ヨウドウリンクピン | PIN, ;R-LINK | |
| 9 | 014780632 | 2 | アナクボミ635-28X6 | SET SCREW, SOCKET(CP) SM6.35X6 | |
| 10 | S51547001 | 1 | ハリボウヨウドウクランク | ROCKER CRANK, ;N-BAR | |
| 11 | 018771432 | 1 | アナボルト635-40X14 | BOLT, SOCKET SM6.35-40X14 | |
| 12 | S51548001 | 1 | ヨウドウリンクジク | SHAFT, ;R-LINK | |
| 13 | S08877001 | 1 | オクリダイカクゴマアテイタ | SLIDE PLATE | |
| 14 | 107272002 | 1 | サラネジ4.37 | SCREW, FLAT SM4.37 | |
| 15 | S42426001 | 1 | ヒラザガネシヨウ8 | WASHER, PLAIN S 8 | |
| 16 | 403388002 | 1 | ナツト7.94 | NUT, SM7.94 | |

118-291-115

From the library of: Superior Sewing Machine & Supply LLC

D . 針冷却関係 / Needle cooler / Nedelkühlungsvorrichtung /
Mécanisme du refroidisseur d'aiguille / Mecanismo del enfriador de aguja

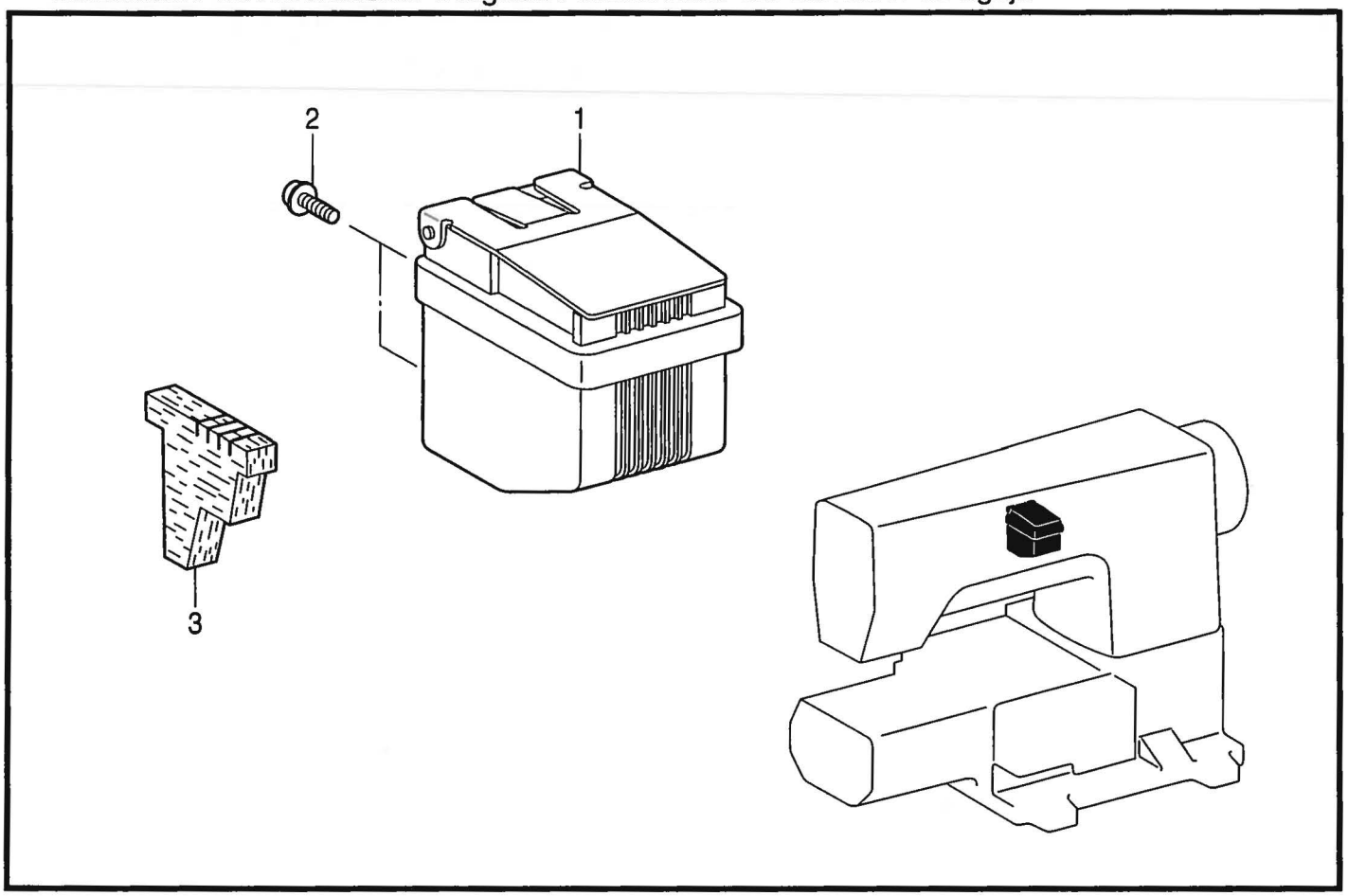


118-291-124

E . 押工関係 / Presser foot mechanism / Stoffdrückerfuß / Mécanisme de pied presseur /
Mecanismo de la prensa tela

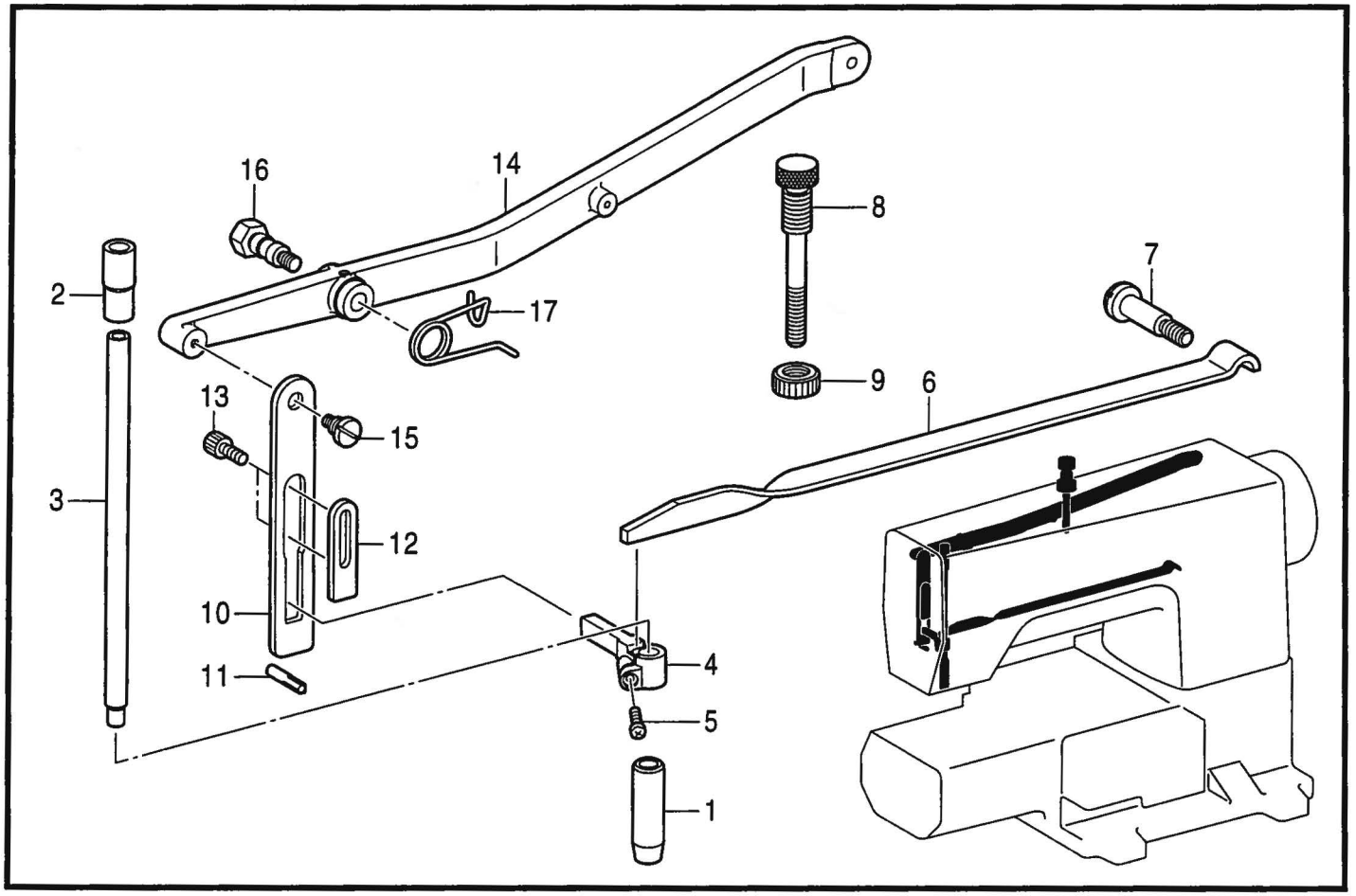


118-291-201



From the library of: Superior Sewing Machine & Supply LLC

## D . 針冷却関係 / Needle cooler / Nadelkühlungsvorrichtung / Mécanisme du refroidisseur d'aiguille / Mecanismo del enfriador de aguja

| REF.NO. | CODE | Q'TY | ヒンメイ | NAME OF PARTS | RM |
|---|---|---|---|---|---|
| 1 | S08758109 | 1 | ハリイトレイキヤクタンククミ | N/THREAD COOLER TANK ASSY | |
| 2 | 087311215 | 2 | カツプBタイト3X12 | TAPTITE, CUP B M3X12 | |
| 3 | S08761100 | 1 | ハリイトレイキヤクフエルト | FELT | |

118-291-124

## E . 押工関係 / Presser foot mechanism / Stoffdrückerfuß / Mécanisme de pied presseur / Mecanismo de la prensa tela

| REF.NO. | CODE | Q'TY | ヒンメイ | NAME OF PARTS | RM |
|---|---|---|---|---|---|
| 1 | 145472001 | 1 | オサエボウメタル | BUSH, P-BAR | |
| 2 | S51550001 | 1 | オサエボウメタルU | BUSH, U ;P-BAR | |
| 3 | S51551001 | 1 | オサエボウ | PRESSER BAR | |
| 4 | S51552001 | 1 | オサエボウダキ | GUIDE BRACKET, ;P-BAR | |
| 5 | 062681012 | 1 | ナベコ437-40X10 | SCREW, PAN SM4.37-40X10 | |
| 6 | S51553001 | 1 | オサエイタバネ | SPRING, PLATE | |
| 7 | S51730001 | 1 | ダンネジ6.35 | SHOULDER SCREW, SM6.35 | |
| 8 | S51554001 | 1 | オサエチヨウセツネジ | ADJUSTING SCREW, PRESSER | |
| 9 | S31013001 | 1 | チヨウセツネジツマミナツト | ADJUSTING NUT, PRESSER | |
| 10 | S51555001 | 1 | オサエアゲイタ | LIFTER PLATE, ;P-BAR | |
| 11 | 140063001 | 1 | ミゾツキピン | PIN, DOWEL | |
| 12 | S51556001 | 1 | オサエアゲストツパ | STOPPER, ;LIFTER | |
| 13 | 018680832 | 2 | アナボルト4.37X8 | BOLT, SOCKET SM4.37X8 | |
| 14 | S51557001 | 1 | オサエアゲレバー | LIFTER LEVER, ;P-BAR | |
| 15 | 149127001 | 1 | ダンネジ6.35 | SHOULDER SCREW, SM6.35 | |
| 16 | S51558001 | 1 | ダンネジ7.94 | SHOULDER SCREW, SM7.94 | |
| 17 | 105106001 | 1 | ヒザアゲネジリバネ | SPRING, TWIST | |

118-291-201

From the library of: Superior Sewing Machine & Supply LLC

F . 送り関係 / Feed mechanism / Transportvorrichtung / Mécanisme de l´éntaînement / Mecanismo de la alimentación

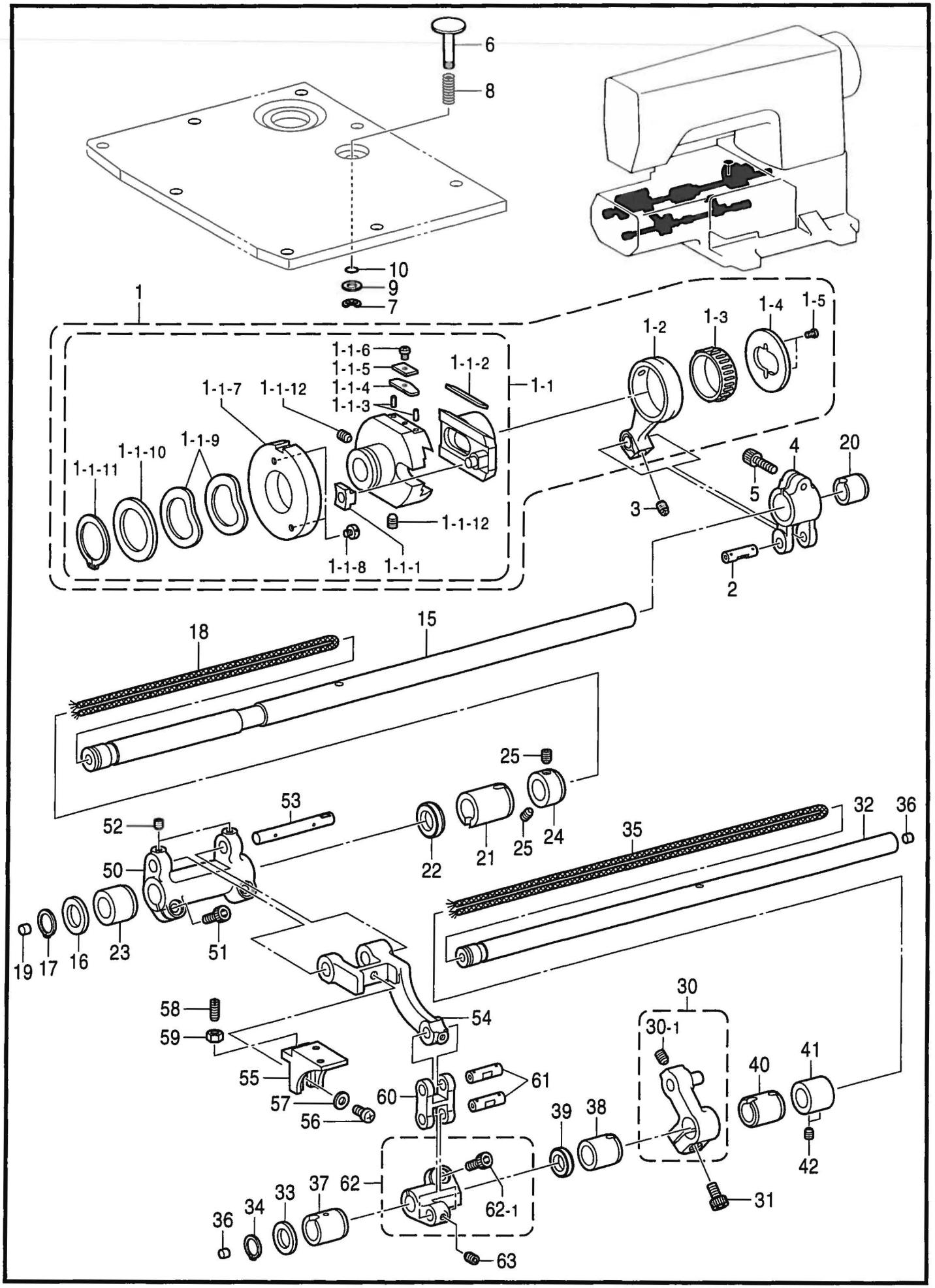


118-291-202



From the library of: Superior Sewing Machine & Supply LLC

## F. 送り関係 / Feed mechanism / Transportvorrichtung / Mécanisme de l'entraînement / Mecanismo de la alimentación

| REF.NO. | CODE | Q'TY | ヒンメイ | NAME OF PARTS | RM |
|---|---|---|---|---|---|
| 1 | S51560101 | 1 | オクリヘンシンリンロツドクミ | F-ECCENTRIC WHEEL & ROD ASSY | |
| 1-1 | S51561101 | 1 | オクリヘンシンリンクミ | FEED ECCENTRIC WHEEL ASSY | |
| 1-1-1 | S51563001 | 1 | チヨウセツピンカクコマ | SLIDE BLOCK, ;ADJUST-PIN | |
| 1-1-2 | S51564101 | 1 | ジブ | GIB | |
| 1-1-3 | S51565101 | 2 | ジブオサエピン | PIN | |
| 1-1-4 | S51566001 | 1 | ジブオサエイタバネL | SPRING, PLATE ;L | |
| 1-1-5 | 146403001 | 1 | ジブオサエイタバネS | SPRING, PLATE ;S | |
| 1-1-6 | 062660712 | 1 | ナベコ318-40X7 | SCREW, PAN SM3.18-40X7 | |
| 1-1-7 | S51568000 | 1 | ヘンシンチヨウセツカム | ADJUSTING CAM, ;ECCENTRIC | |
| 1-1-8 | 101479101 | 2 | シメネジ3.18 | SCREW, SM3.18 | |
| 1-1-9 | 103602002 | 2 | ナミガタバネザガネ | WASHER, WAVE SPRING | |
| 1-1-10 | 142120001 | 1 | ザガネ | WASHER, PLAIN | |
| 1-1-11 | 142369001 | 1 | トメワジクヨウC | RETAINING RING, EXTERNAL C | |
| 1-1-12 | 014761030 | 2 | アナクボミ595-28X10 | SET SCREW, SOCKET(CP)SM5.95X10 | |
| 1-2 | S51569001 | 1 | オクリロツド | FEEDING ROD | |
| 1-3 | S12915001 | 1 | ニードルジクウケ25 | ROLLER BEARING, RADIAL 25 ;RED | |
| 1-4 | S12821101 | 1 | レンカンオサエ | HOLDER | |
| 1-5 | 062630612 | 2 | ナベコ238-56X6 | SCREW, PAN SM2.38-56X6 | |
| 2 | S51570001 | 1 | オクリレンカンジク | SHAFT, ;F-CONNECTOR | |
| 3 | 100251001 | 1 | トメネジ6.35 | SET SCREW, (CP) SM6.35-40X6.5 | |
| 4 | S51571001 | 1 | オクリウデ | FEEDING ARM | |
| 5 | 018771632 | 1 | アナボルト635-40X16 | BOLT, SOCKET SM6.35-40X16 | |
| 6 | S51572001 | 1 | プツシユボタン | PUSH BUTTON | |
| 7 | 048040342 | 1 | トメワE4 | RETAINING RING, E4 | |
| 8 | S51573001 | 1 | ボタンジクバネ | SPRING, COMPRESSION | |
| 9 | 153484001 | 1 | ザガネ4.76 | WASHER, PLAIN 4.76 | |
| 10 | 081003670 | 1 | OリングPW3 | O RING, PW3 | |
| 15 | S51574101 | 1 | シユオクリジク | FEED SHAFT, MAIN | |
| 16 | 115007001 | 1 | ザガネ | WASHER, PLAIN 13 | |
| 17 | 048120142 | 1 | トメワジクヨウC12 | RETAINING RING, C12 | |
| 18 | S51667000 | 1 | クミヒモ3X3(335) | WICK, 3X3 L = 335 | |
| 19 | S20878000 | 1 | ゴムセン5.3 | RUBBER CAP, 5.3 | |
| 20 | S51575001 | 1 | シユオクリジクメタルR | BUSH, R ;F-SHAFT | |
| 21 | 148121000 | 1 | クランクジクメタルL | BUSH, L ;CRANKSHAFT | |
| 22 | S12918000 | 1 | ダストシール | DUST SEAL | |
| 23 | S51576000 | 1 | シユオクリジクメタルL | BUSH, L ;F-SHAFT | |
| 24 | 117671002 | 1 | セツトカラー | SET SCREW COLLAR | |
| 25 | 014770632 | 2 | アナクボミ635-40X6 | SET SCREW, SOCKET(CP) SM6.35X6 | |
| 30 | S51577001 | 1 | ジヨウゲロツドウデクミ | VERTICAL ROD ARM ASSY | |
| 30-1 | 014770632 | 1 | アナクボミ635-40X6 | SET SCREW, SOCKET(CP) SM6.35X6 | |
| 31 | 018771432 | 1 | アナボルト635-40X14 | BOLT, SOCKET SM6.35-40X14 | |
| 32 | S51579001 | 1 | ヨウドウジク | ROCKER SHAFT | |
| 33 | 142628001 | 1 | スイヘイオクリクランクリング | SPACER | |
| 34 | 048110142 | 1 | トメワジクヨウC11 | RETAINING RING, EXTERNAL C11 | |
| 35 | S51580000 | 1 | クミヒモ4X4(435) | WICK, 4X4 L = 435 | |
| 36 | S20878000 | 2 | ゴムセン5.3 | RUBBER CAP, 5.3 | |
| 37 | 158718000 | 1 | ハリボウクランクメタルR | BUSH, R ;N-BAR CRANK | |
| 38 | S12826100 | 1 | ルーパジクメタルM | BUSH, M ;LOOPER SHAFT | |
| 39 | S12827000 | 1 | ダストシール | DUST SEAL | |
| 40 | S12825000 | 1 | ルーパジクメタルR | BUSH, R ;LOOPER SHAFT | |
| 41 | S28193001 | 1 | セツトカラー | SET SCREW COLLAR | |
| 42 | 148857001 | 2 | アナトメネジ6.35クボミ | SET SCREW, SOCKET (CP) SM6.35 | |
| 50 | S51581001 | 1 | オクリダイウデ | ARM, ;F-BRACKET | |
| 51 | 018771432 | 2 | アナボルト635-40X14 | BOLT, SOCKET SM6.35-40X14 | |
| 52 | 014760632 | 2 | アナクボミ595-28X6 | SET SCREW, SOCKET (CP)SM5.95X6 | |
| 53 | S51582001 | 1 | オクリダイウデジク | SHAFT, ;F-BRACKET | |
| 54 | S51583001 | 1 | オクリダイ | FEED BRACKET | |
| 55 | S51584001 | 1 | オクリバトリツケダイ | FIXING BASE, ;F-DOG | |
| 56 | 062761012 | 1 | ナベコ595-28X10 | SCREW, PAN SM5.95-28X10 | |



From the library of: Superior Sewing Machine & Supply LLC

F . 送り関係 / Feed mechanism / Transportvorrichtung / Mécanisme de l´éntaînement / Mecanismo de la alimentación

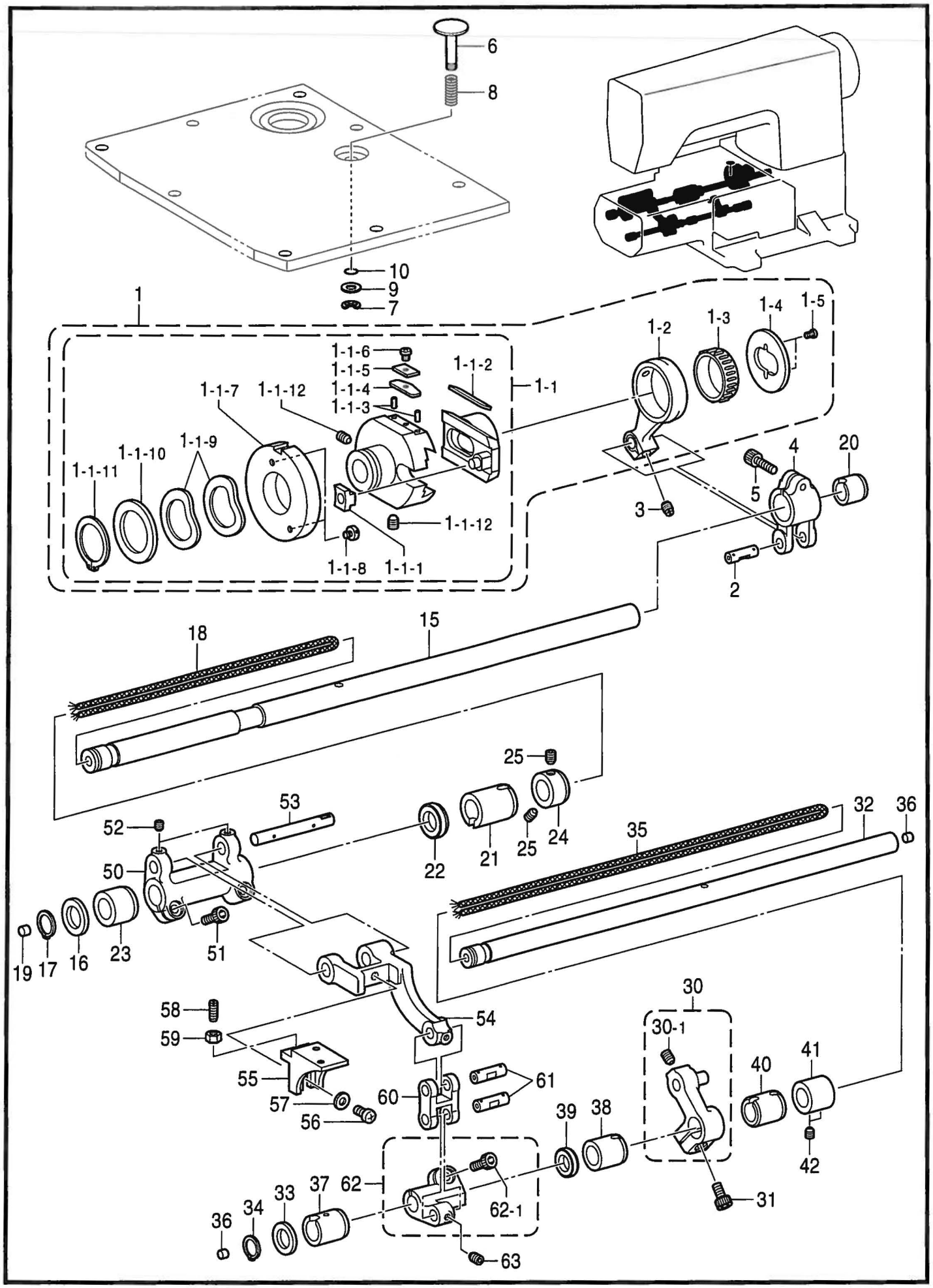


118-291-202



From the library of: Superior Sewing Machine & Supply LLC

## F. 送り関係 / Feed mechanism / Transportvorrichtung / Mécanisme de l'entraînement / Mecanismo de la alimentación

| REF.NO. | CODE | Q'TY | ヒンメイ | NAME OF PARTS | RM |
|---|---|---|---|---|---|
| 57 | 118735002 | 1 | ザガネ | WASHER, PLAIN | |
| 58 | 103978002 | 1 | トメネジ3.18 | SET SCREW, SM3.18 | |
| 59 | 021660102 | 1 | ナツト1シユ3.18 | NUT, 1 SM3.18 | |
| 60 | S51585001 | 1 | ジヨウゲオクリレンカン | CONNECTING ROD, ;V-FEEDING | |
| 61 | S51570001 | 2 | オクリレンカンジク | SHAFT, ;F-CONNECTOR | |
| 62 | S51587001 | 1 | ジヨウゲオクリウデクミ | FEEDING ARM ASSY, ;VERTICAL | |
| 62-1 | 018771432 | 1 | アナボルト635-40X14 | BOLT, SOCKET SM6.35-40X14 | |
| 63 | 014760632 | 2 | アナクボミ595-28X6 | SET SCREW, SOCKET (CP)SM5.95X6 | |



From the library of: Superior Sewing Machine & Supply LLC

< 2本針, 針幅34.9mm用 / For " 2 Needle ", Needle gauge : 34.9mm >

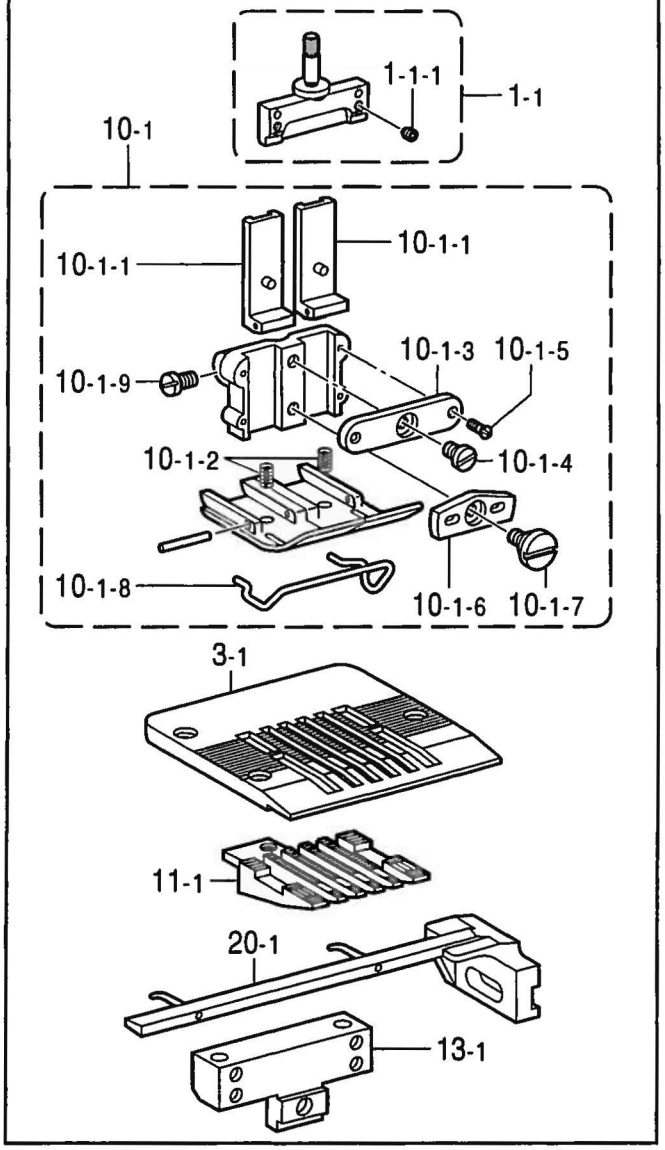


< 2本針, 針幅31.8mm用 / For " 2 Needle ", Needle gauge : 31.8mm >

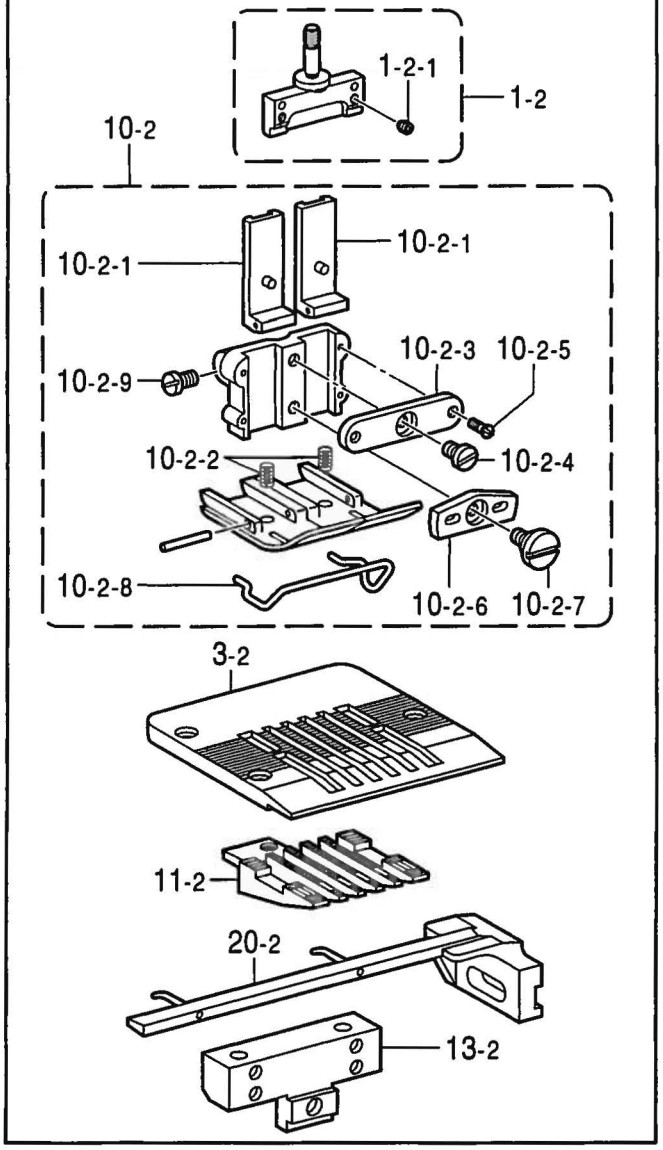


< 4本針, 針幅6.4-25.4-6.4mm用 / For " 4 Needle ", Needle gauge : 6.4-25.4-6.4mm >

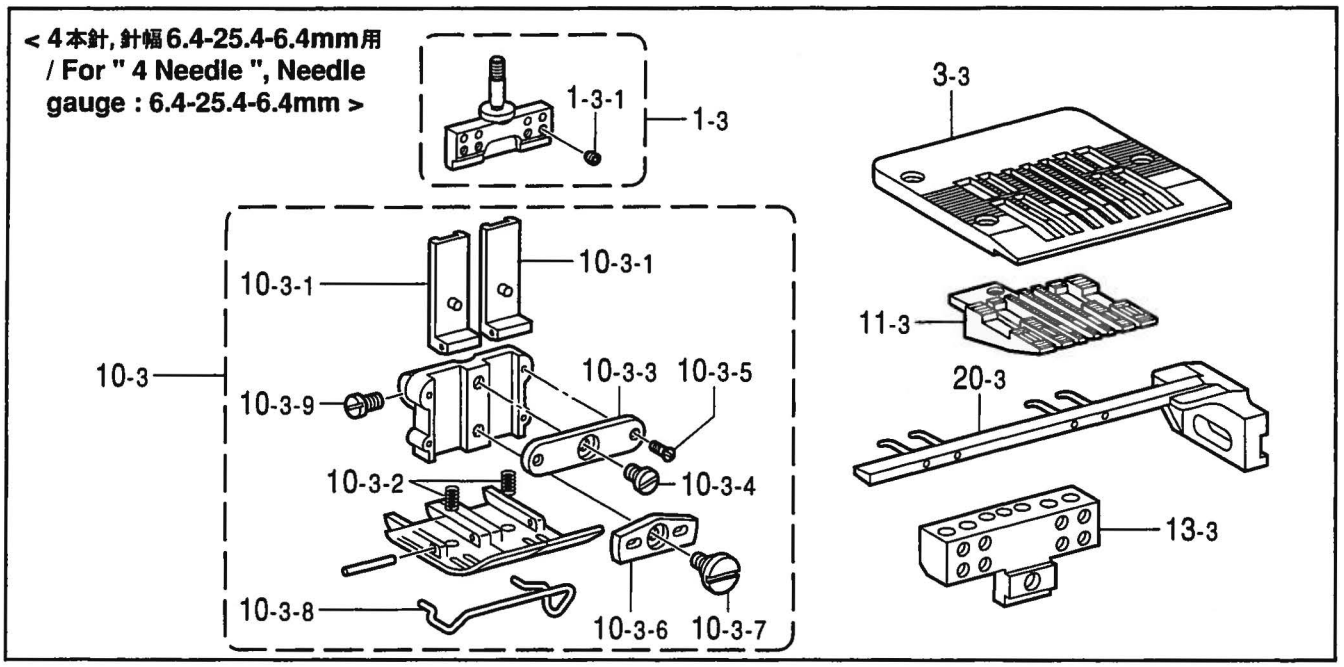


118-291-231



From the library of: Superior Sewing Machine & Supply LLC

| REF.NO. | CODE | Q'TY | ヒンメイ | NAME OF PARTS | RM |
|---|---|---|---|---|---|
| | | | ＜2本針,針幅34.9mm用＞ | ＜For " 2 Needle ", Needle gauge : 34.9mm＞ | |
| 1-1 | S51590001 | 1 | ハリドメ1 3/8クミ | NEEDLE CLAMP ASSY, 1 3/8 ;TWIN | |
| 1-1-1 | 146427001 | 2 | アナトメネジ3.18クボミ | SET SCREW, SOCKET (CP) SM3.18 | |
| 3-1 | S51595101 | 1 | ハリイタ1 3/8 | NEEDLE PLATE, 1 3/8 ;TWIN | |
| 10-1 | S51597201 | 1 | オサエ1 3/8クミ | PRESSER FOOT ASSY, 1 3/8 ;TWIN | |
| 10-1-1 | S51598001 | 1 | オサエシジタイ | HOLDER BRACKET, ;P-FOOT | |
| 10-1-2 | S51603001 | 2 | オサエバネ | SPRING, COMPRESSION | |
| 10-1-3 | S51605001 | 1 | オサエアテイタ | HOLDER PLATE | |
| 10-1-4 | S51626001 | 1 | シメネジ4.37 | SCREW, SM4.37-40X3.8 | |
| 10-1-5 | S51625001 | 2 | サラネジ2.38 | SCREW, FLAT SM2.38-56X6 | |
| 10-1-6 | S51606001 | 1 | オサエテンビンイタ | HOLDER PLATE, ;MOVABLE | |
| 10-1-7 | S51607001 | 1 | ダンネジ4.76 | SHOULDER SCREW, SM4.76 | |
| 10-1-8 | S51608101 | 1 | フインガーガード | FINGER GUARD | |
| 10-1-9 | S51627001 | 1 | シメネジM5 | SCREW, M5X7.1 | |
| 11-1 | S51612201 | 1 | オクリバ1 3/8 | FEED DOG, 1 3/8 ;TWIN | |
| 13-1 | S51614001 | 1 | ルーパホルダ1 3/8 | LOOPER HOLDER, 1 3/8 ;TWIN | |
| 20-1 | S51619001 | 1 | リテーナ1 3/8クミ | RETAINER ASSY, 1 3/8 ;TWIN | |
| | | | ＜2本針,針幅31.8mm用＞ | ＜For " 2 Needle ", Needle gauge : 31.8mm＞ | |
| 1-2 | S51592001 | 1 | ハリドメ1 1/4クミ | NEEDLE CLAMP ASSY, 1 1/4 ;TWIN | |
| 1-2-1 | 146427001 | 2 | アナトメネジ3.18クボミ | SET SCREW, SOCKET (CP) SM3.18 | |
| 3-2 | S51596101 | 1 | ハリイタ1 1/4 | NEEDLE PLATE, 1 1/4 ;TWIN | |
| 10-2 | S51609201 | 1 | オサエ1 1/4クミ | PRESSER FOOT ASSY, 1 1/4 ;TWIN | |
| 10-2-1 | S51598001 | 1 | オサエシジタイ | HOLDER BRACKET, ;P-FOOT | |
| 10-2-2 | S51603001 | 2 | オサエバネ | SPRING, COMPRESSION | |
| 10-2-3 | S51605001 | 1 | オサエアテイタ | HOLDER PLATE | |
| 10-2-4 | S51626001 | 1 | シメネジ4.37 | SCREW, SM4.37-40X3.8 | |
| 10-2-5 | S51625001 | 2 | サラネジ2.38 | SCREW, FLAT SM2.38-56X6 | |
| 10-2-6 | S51606001 | 1 | オサエテンビンイタ | HOLDER PLATE, ;MOVABLE | |
| 10-2-7 | S51607001 | 1 | ダンネジ4.76 | SHOULDER SCREW, SM4.76 | |
| 10-2-8 | S51608101 | 1 | フインガーガード | FINGER GUARD | |
| 10-2-9 | S51627001 | 1 | シメネジM5 | SCREW, M5X7.1 | |
| 11-2 | S51613201 | 1 | オクリバ1 1/4 | FEED DOG, 1 1/4 ;TWIN | |
| 13-2 | S51615001 | 1 | ルーパホルダ1 1/4 | LOOPER HOLDER, 1 1/4 ;TWIN | |
| 20-2 | S51622001 | 1 | リテーナ1 1/4クミ | RETAINER ASSY, 1 1/4 ;TWIN | |
| | | | ＜4本針,<br>針幅6.4-25.4-6.4mm用＞ | ＜For " 4 Needle ",<br>Needle gauge : 6.4-25.4-6.4mm＞ | |
| 1-3 | S55853001 | 1 | ハリトメ1/4-1-1/4クミ | NEEDLE CLAMP ASSY, 1/4-1-1/4 | |
| 1-3-1 | 146427001 | 4 | アナトメネジ3.18クボミ | SET SCREW, SOCKET (CP) SM3.18 | |
| 3-3 | S55855001 | 1 | ハリイタ1/4-1-1/4 | NEEDLE PLATE, 1/4-1-1/4 ;FOUR | |
| 10-3 | S55856001 | 1 | オサエ1/4-1-1/4クミ | PRESSER FOOT ASSY, 1/4-1-1/4 | |
| 10-3-1 | S51598001 | 1 | オサエシジタイ | HOLDER BRACKET, ;P-FOOT | |
| 10-3-2 | S51603001 | 2 | オサエバネ | SPRING, COMPRESSION | |
| 10-3-3 | S51605001 | 1 | オサエアテイタ | HOLDER PLATE | |
| 10-3-4 | S51626001 | 1 | シメネジ4.37 | SCREW, SM4.37-40X3.8 | |
| 10-3-5 | S51625001 | 2 | サラネジ2.38 | SCREW, FLAT SM2.38-56X6 | |
| 10-3-6 | S51606001 | 1 | オサエテンビンイタ | HOLDER PLATE, ;MOVABLE | |
| 10-3-7 | S51607001 | 1 | ダンネジ4.76 | SHOULDER SCREW, SM4.76 | |
| 10-3-8 | S51608101 | 1 | フインガーガード | FINGER GUARD | |
| 10-3-9 | S51627001 | 1 | シメネジM5 | SCREW, M5X7.1 | |
| 11-3 | S55859001 | 1 | オクリバ1/4-1-1/4 | FEED DOG, 1/4-1-1/4 ;FOUR | |
| 13-3 | S55860001 | 1 | ルーパホルダ1/4-1-1/4 | LOOPER HOLDER, 1/4-1-1/4 ;FOUR | |
| 20-3 | S55861001 | 1 | リテーナ1/4-1-1/4クミ | RETAINER ASSY, 1/4-1-1/4 ;FOUR | |



From the library of: Superior Sewing Machine & Supply LLC

< 共通部品 / For Common parts >

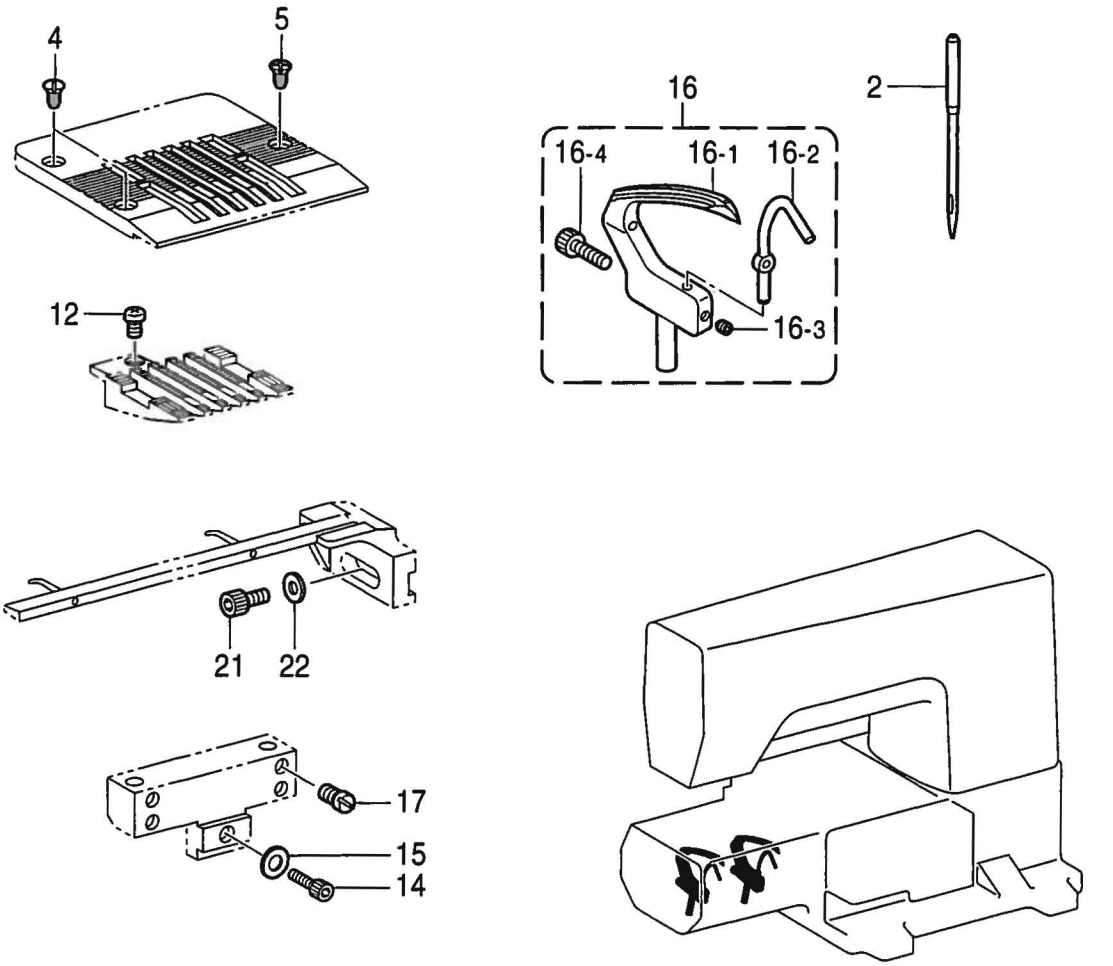


118-291-231



From the library of: Superior Sewing Machine & Supply LLC

| REF.NO. | CODE | Q'TY | ヒンメイ | NAME OF PARTS | RM |
|---|---|---|---|---|---|
| | | | <2本針用> | <For " 2 Needle " > | |
| 2 | S51594022 | 2 | ミシンハリDV57 ... <#22 NM140> | NEEDLE, DV57 (NM140) ..... <#22 NM140> | |
| | | | <4本針用> | <For " 4 Needle " > | |
| 2 | S51594022 | 4 | ミシンハリDV57 ... <#22 NM140> | NEEDLE, DV57 (NM140) ..... <#22 NM140> | |
| 4 | 100032004 | 2 | サラネジ4.37 | SCREW, FLAT SM4.37-40X8 | |
| 5 | 151267001 | 1 | サラネジ4.37 | SCREW, FLAT SM4.37-40X8 | |
| 12 | 062680712 | 2 | ナベコ437-40X7 | SCREW, PAN SM4.37-40X7 | |
| 14 | 018501432 | 1 | アナボルト5X14 | BOLT, SOCKET M5X14 | |
| 15 | 146354001 | 1 | ザガネ | WASHER, PLAIN 5 | |
| | | | <2本針用> | <For " 2 Needle " > | |
| 16 | S51616001 | 2 | ルーパクミ | LOOPER ASSY | |
| 16-1 | S51617001 | 2 | ルーパ | LOOPER | |
| 16-2 | S51618001 | 2 | ルーパハリウケ | NEEDLE GUARD, ;LOOPER | |
| 16-3 | 014300332 | 2 | アナクボミ3X3 | SET SCREW, SOCKET (CP) M3X3 | |
| 16-4 | 018301222 | 2 | アナボルト3X12 | BOLT, SOCKET M3X12 | |
| 17 | 100366002 | 4 | マルヒラトメネジ4.37X5 | SET SCREW, (FT) SM4.37X5 | |
| | | | <4本針用> | <For " 4 Needle " > | |
| 16 | S51616001 | 4 | ルーパクミ | LOOPER ASSY | |
| 16-1 | S51617001 | 4 | ルーパ | LOOPER | |
| 16-2 | S51618001 | 4 | ルーパハリウケ | NEEDLE GUARD, ;LOOPER | |
| 16-3 | 014300332 | 4 | アナクボミ3X3 | SET SCREW, SOCKET (CP) M3X3 | |
| 16-4 | 018301222 | 4 | アナボルト3X12 | BOLT, SOCKET M3X12 | |
| 17 | 100366002 | 8 | マルヒラトメネジ4.37X5 | SET SCREW, (FT) SM4.37X5 | |
| 21 | 018680832 | 1 | アナボルト4.37X8 | BOLT, SOCKET SM4.37X8 | |
| 22 | 100645003 | 1 | ザガネ | WASHER | |
| | | | " オプション部品 " | " OPTION PARTS " | |
| | | | <2本針用> | <For " 2 Needle " > | |
| 2 | S51594019 | 2 | ミシンハリDV57 ... <#19 NM120> | NEEDLE, DV57 (NM120) ..... <#19 NM120> | |
| | | | <4本針用> | <For " 4 Needle " > | |
| 2 | S51594019 | 4 | ミシンハリDV57 ... <#19 NM120> | NEEDLE, DV57 (NM120) ..... <#19 NM120> | |



From the library of: Superior Sewing Machine & Supply LLC

H . 下軸関係 / Lower shaft mechanism / Untere Welle / Mécanisme de l´arbre inférieur / Mecanismo del eje inferior

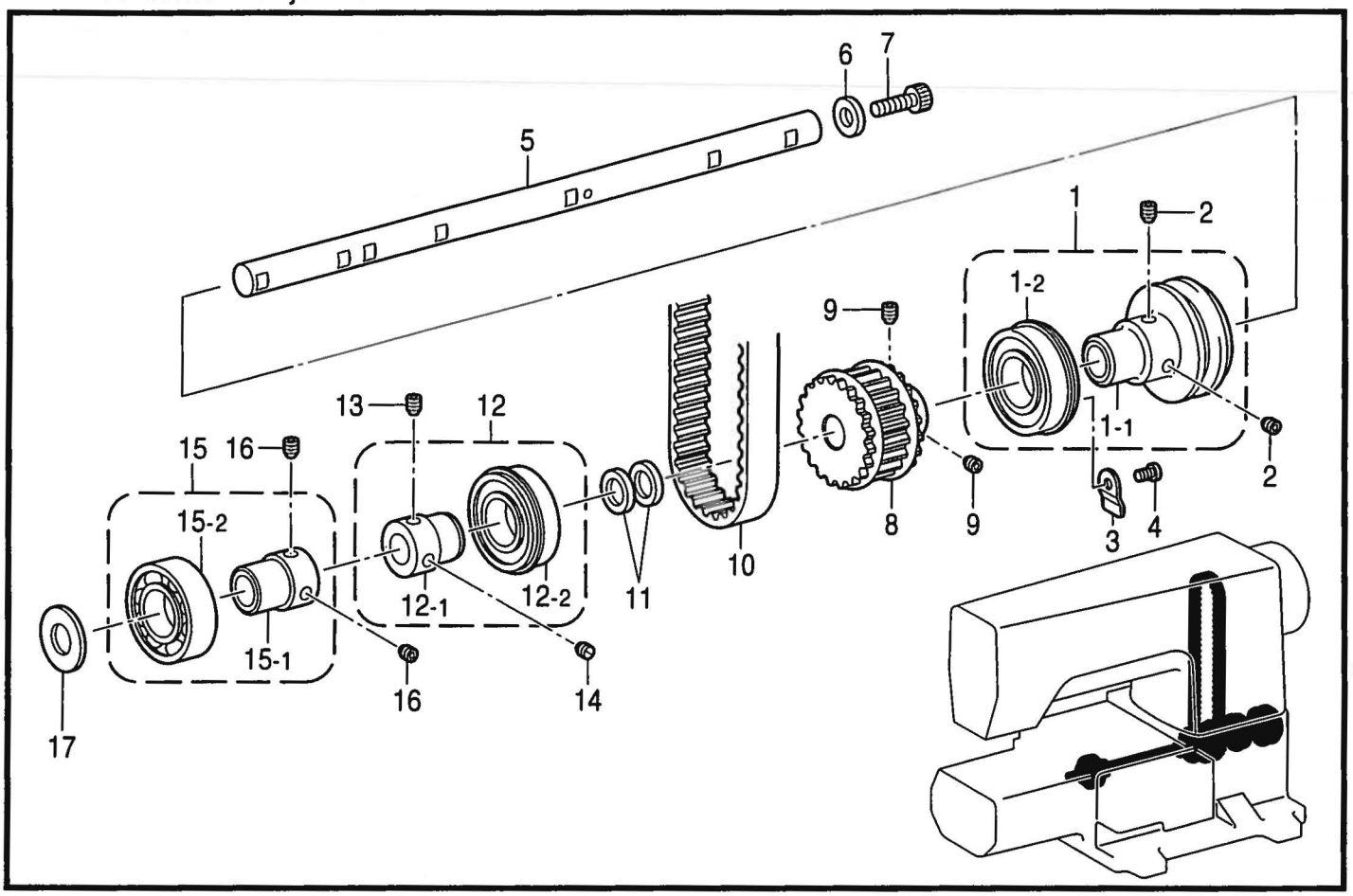


118-291-305

J . ルーパー関係 / Looper mechanism / Greifer / Mécanisme des griffes / Mecanismo del Presilladora

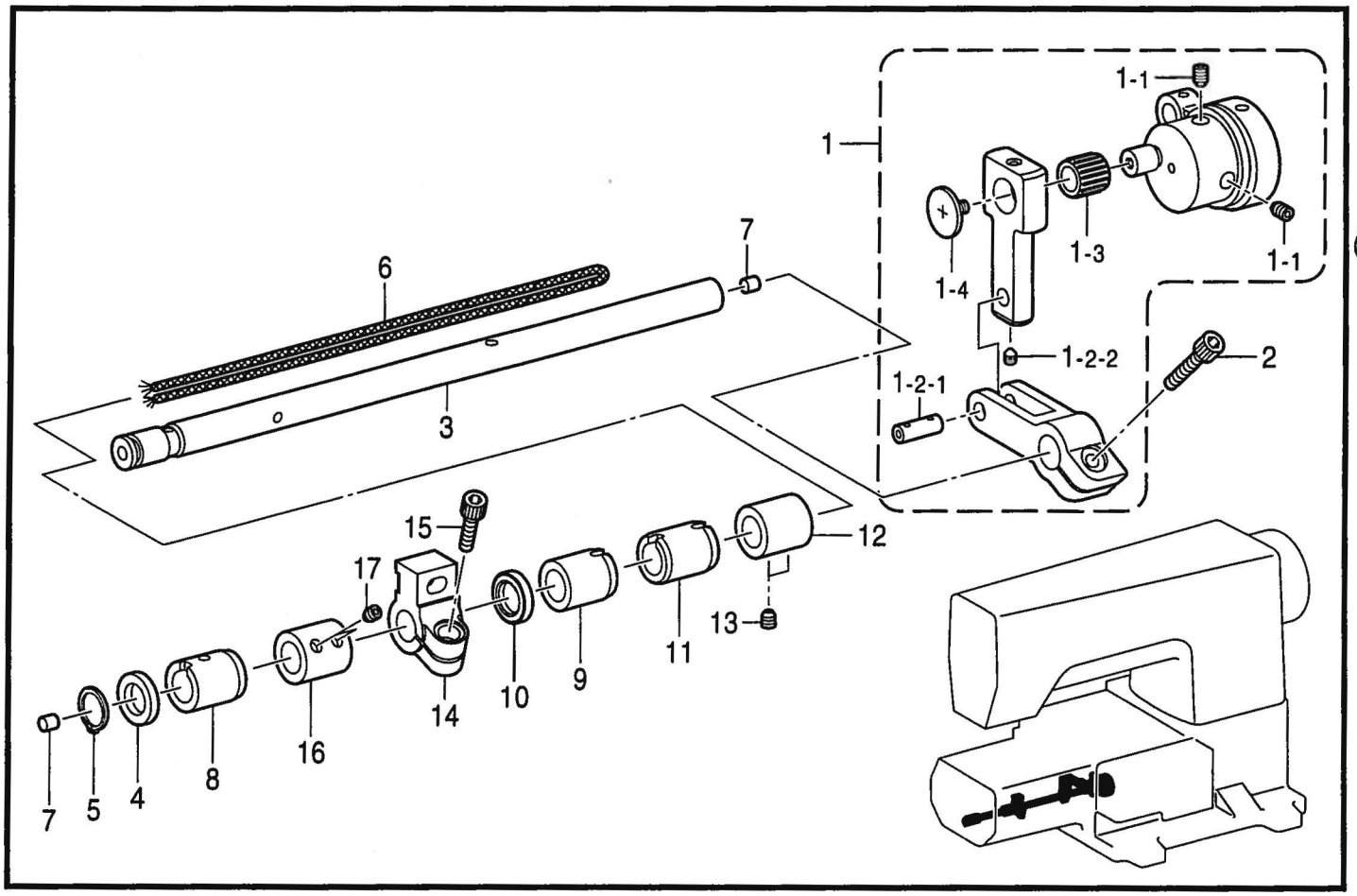


118-291-306



From the library of: Superior Sewing Machine & Supply LLC

## H．下軸関係 / Lower shaft mechanism / Untere Welle / Mécanisme de l'arbre inférieur / Mecanismo del eje inferior

| REF.NO. | CODE | Q'TY | ヒンメイ | NAME OF PARTS | RM |
|---|---|---|---|---|---|
| 1 | S08889101 | 1 | Vベルトプーリクミ | V-BELT PULLEY ASSY | |
| 1-1 | S08890001 | 1 | Vベルトプーリ | V-BELT PULLEY | |
| 1-2 | S14622001 | 1 | タマジクウケ6304VV | BALL BEARING, 6304VV | |
| 2 | 014780632 | 2 | アナクボミ635-28X6 | SET SCREW, SOCKET(CP) SM6.35X6 | |
| 3 | 153734001 | 2 | アームササエイタバネ | SPRING, PLATE | |
| 4 | 062680612 | 2 | ナベコ4.37-40X6 | SCREW, PAN SM4.37-40X6 | |
| 5 | S51630001 | 1 | シタジク | LOWER SHAFT | |
| 6 | 154886001 | 1 | ザガネ | WASHER | |
| 7 | 018771432 | 1 | アナボルト635-40X14 | BOLT, SOCKET SM6.35-40X14 | |
| 8 | S38241051 | 1 | タイミングプーリUクミ | TIMING PULLEY ASSY, U | |
| 9 | 014771032 | 2 | アナクボミ635-40X10 | SET SCREW, SOCKET(CP)SM6.35X10 | |
| 10 | S51631000 | 1 | タイミングベルト | TIMING BELT | |
| 11 | 224485000 | 2 | 72X15X22ST | RING, 2X15X22ST | |
| 12 | S08896101 | 1 | タマジクウケクミ | BALL BEARING ASSY | |
| 12-1 | S08897001 | 1 | タマジクウケブシユ | BUSH, ;BALL BEARING | |
| 12-2 | S14623001 | 1 | タマジクウケ6204DV | BALL BEARING, 6204DV | |
| 13 | 014770632 | 1 | アナクボミ635-40X6 | SET SCREW, SOCKET(CP) SM6.35X6 | |
| 14 | 112684001 | 1 | トメネジ6.35 | SET SCREW, SM6.35 | |
| 15 | S51632001 | 1 | タマジクウケクミ | BALL BEARING ASSY | |
| 15-1 | S08897001 | 1 | タマジクウケブシユ | BUSH, ;BALL BEARING | |
| 15-2 | 076004000 | 1 | タマジクウケ6004 | BALL BEARING, ;6004 | |
| 16 | 014770632 | 2 | アナクボミ635-40X6 | SET SCREW, SOCKET(CP) SM6.35X6 | |
| 17 | S32521001 | 1 | スラストザガネ | WASHER, THRUST | |

118-291-305

## J．ルーパー関係 / Looper mechanism / Greifer / Mécanisme des griffes / Mecanismo del presilladora

| REF.NO. | CODE | Q'TY | ヒンメイ | NAME OF PARTS | RM |
|---|---|---|---|---|---|
| 1 | S51633001 | 1 | ルーパUDヘンシンソウクミ | ECCENTRIC WHEEL SET, ;L-UD | |
| 1-1 | 014770632 | 2 | アナクボミ635-40X6 | SET SCREW, SOCKET(CP) SM6.35X6 | |
| 1-2-1 | S39569001 | 1 | ハリボウリンクジク | LINK SHAFT, ;N-BAR | |
| 1-2-2 | S23342001 | 1 | アナトガリ4X5 | SET SCREW, SOCKET (CN) M4X5 | |
| 1-3 | 147777000 | 1 | ニードルベアリング | NEEDLE BEARING | |
| 1-4 | 145465001 | 1 | シメネジ3.57L | SCREW, SM3.57-40X6 L | |
| 2 | 018771632 | 1 | アナボルト635-40X16 | BOLT, SOCKET SM6.35-40X16 | |
| 3 | S51579001 | 1 | ヨウドウジク | ROCKER SHAFT | |
| 4 | 142628001 | 1 | スイヘイオクリクランクリング | SPACER | |
| 5 | 048110142 | 1 | トメワジクヨウC11 | RETAINING RING, EXTERNAL C11 | |
| 6 | S51580000 | 1 | クミヒモ4X4(435) | WICK, 4X4 L = 435 | |
| 7 | S20878000 | 2 | ゴムセン5.3 | RUBBER CAP, 5.3 | |
| 8 | 158718000 | 1 | ハリボウクランクメタルR | BUSH, R ;N-BAR CRANK | |
| 9 | S12826100 | 1 | ルーパジクメタルM | BUSH, M ;LOOPER SHAFT | |
| 10 | S12827000 | 1 | ダストシール | DUST SEAL | |
| 11 | S12825000 | 1 | ルーパジクメタルR | BUSH, R ;LOOPER SHAFT | |
| 12 | S28193001 | 1 | セツトカラー | SET SCREW COLLAR | |
| 13 | 148857001 | 2 | アナトメネジ6.35クボミ | SET SCREW, SOCKET (CP) SM6.35 | |
| 14 | S51642001 | 1 | ルーパホルダウデ | ARM, ;L-HOLDER | |
| 15 | 018771432 | 1 | アナボルト635-40X14 | BOLT, SOCKET SM6.35-40X14 | |
| 16 | S28193001 | 1 | セツトカラー | SET SCREW COLLAR | |
| 17 | 148857001 | 2 | アナトメネジ6.35クボミ | SET SCREW, SOCKET (CP) SM6.35 | |

118-291-306

From the library of: Superior Sewing Machine & Supply LLC

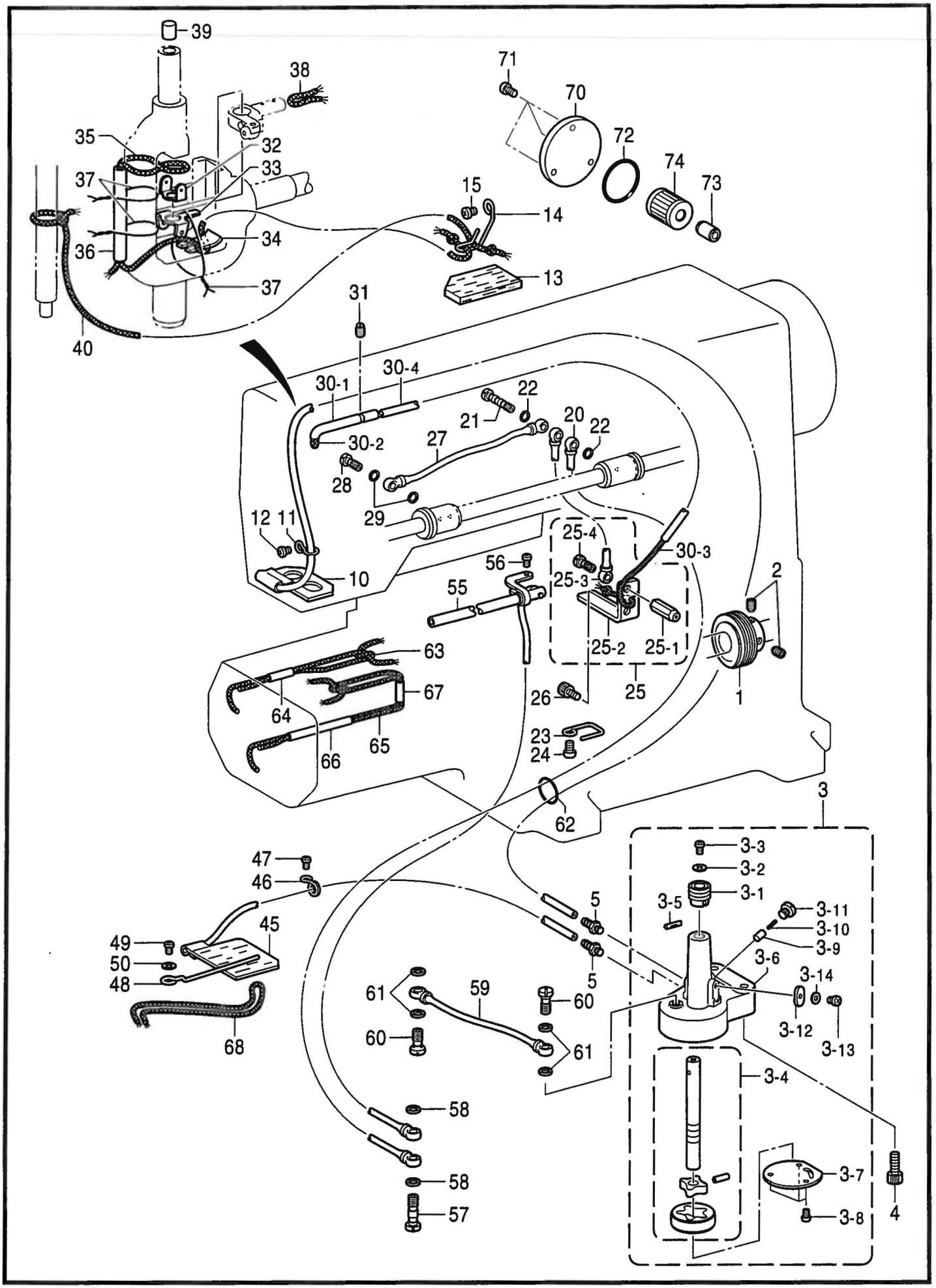


118-291-350



From the library of: Superior Sewing Machine & Supply LLC

| REF.NO. | CODE | Q'TY | ヒンメイ | NAME OF PARTS | RM |
|---|---|---|---|---|---|
| 1 | S08935001 | 1 | ウオーム | WORM | |
| 2 | 014770632 | 2 | アナクボミ635-40X6 | SET SCREW, SOCKET(CP) SM6.35X6 | |
| 3 | S51645001 | 1 | トロコイドポンプクミ | PUMP ASSY | |
| 3-1 | 144619000 | 1 | ウオームホイール | WORM WHEEL | |
| 3-2 | 025350332 | 1 | ヒラザガネダイ3.5 | WASHER, PLAIN L 3.5 | |
| 3-3 | 062670812 | 1 | ナベコ3.57-40X8 | SCREW, PAN SM3.57-40X8 | |
| 3-4 | S28398001 | 1 | ポンプロータークミ | PUMP INNER ROTOR ASSY | |
| 3-5 | 144622001 | 1 | ミゾツキピンEガタ | PIN, DOWEL ;E | |
| 3-6 | S51646000 | 1 | ポンプケース | PUMP CASE | |
| 3-7 | 147527000 | 1 | ポンプフタ | PUMP COVER | |
| 3-8 | 062670812 | 3 | ナベコ3.57-40X8 | SCREW, PAN SM3.57-40X8 | |
| 3-9 | 144875001 | 2 | プランジヤー | PLUNGER | |
| 3-10 | 144876001 | 2 | プランジヤーバネ | SPRING, COMPRESSION | |
| 3-11 | 112467002 | 2 | シメネジ6.35 | SCREW, SM6.35X5 | |
| 3-12 | S51647000 | 1 | ポンプフエルト | FELT | |
| 3-13 | 062670415 | 1 | ナベコ357-40X4 | SCREW, PAN SM3.57-40X4 | |
| 3-14 | 025350332 | 1 | ヒラザガネダイ3.5 | WASHER, PLAIN L 3.5 | |
| 4 | 018061632 | 2 | アナボルト6X16 | BOLT, SOCKET M6X16 | |
| 5 | 142359001 | 2 | オイルクチ | OIL FEEDING PIPE | |
| 10 | S51648100 | 1 | ダストプレートフエルトクミ | DUST PLATE & FELT ASSY | |
| 11 | S51683001 | 1 | チユーブササエ | TUBE SUPPORT | |
| 12 | 062680612 | 1 | ナベコ4.37-40X6 | SCREW, PAN SM4.37-40X6 | |
| 13 | S51651000 | 1 | フエルト | FELT | |
| 14 | S51652000 | 1 | フエルトオサエ | FELT HOLDER | |
| 15 | 062680612 | 1 | ナベコ4.37-40X6 | SCREW, PAN SM4.37-40X6 | |
| 20 | S51653001 | 1 | ビニルチユーブクミ | OIL TUBE ASSY | |
| 21 | 112351001 | 1 | ハイユパイプネジ | OIL FEEDING PIPE SCREW | |
| 22 | 159476000 | 2 | ザガネ | WASHER, PLAIN | |
| 23 | S51684001 | 1 | チユーブササエ | TUBE SUPPORT | |
| 24 | 062780812 | 1 | ナベコ635-28X8 | SCREW, PAN SM6.35-28X8 | |
| 25 | S51655101 | 1 | ユウヨウケイジククミ | SHAFT ASSY, ;OIL GAUGE | |
| 25-1 | S51656001 | 1 | ユリヨウケイジク | SHAFT, ;OIL GAUGE | |
| 25-2 | S51657001 | 1 | ユリヨウケイジクイタ | PLATE, ;GAUGE SHAFT | |
| 25-3 | S12846001 | 1 | ビニルチユーブクミ | OIL TUBE ASSY | |
| 25-4 | 112359052 | 1 | ハイユパイプツギテネジ | SCREW | |
| 26 | 018060832 | 1 | アナボルト6X8 | BOLT, SOCKET M6X8 | |
| 27 | S28403001 | 1 | ビニルチユーブクミ | OIL TUBE ASSY | |
| 28 | 112359052 | 1 | ハイユパイプツギテネジ | SCREW | |
| 29 | 159476000 | 2 | ザガネ | WASHER, PLAIN | |
| 30 | S51660001 | 1 | オイルパイプクミ | OIL PIPE ASSY | |
| 30-1 | S08945001 | 1 | オイルパイプ | OIL PIPE | |
| 30-2 | S08946000 | 1 | フエルト | FELT | |
| 30-3 | S51661000 | 1 | クミヒモ4X4(385) | WICK, 4X4 L = 385 | |
| 30-4 | S51662000 | 1 | ビニルチユーブ | OIL TUBE | |
| 31 | 151603002 | 1 | トメネジ4.37 | SET SCREW, SM4.37 | |
| 32 | 112719001 | 1 | フエルトオサエU | FELT SUPPORT, U | |
| 33 | 112720101 | 1 | フエルトオサエD | FELT SUPPORT, D | |
| 34 | S51663000 | 1 | ハリボウダイフエルト | FELT, ;N-BAR | |
| 35 | S51664000 | 1 | クミヒモ4X4(310) | WICK, 4X4 L = 310 | |
| 36 | S51665000 | 1 | ビニルチユーブ | OIL TUBE | |
| 37 | S51666100 | 3 | アエンメツキテツセン | WIRE | |
| 38 | 108805001 | 1 | クミヒモ6X6 | WICK | |
| 39 | 148394000 | 1 | ハリボウセン | CAP, N-BAR | |
| 40 | S51668000 | 1 | クミヒモ4X4(200) | OIL TUBE, 4X4 L = 200 | |
| 45 | S51669000 | 1 | チユーブクミ | OIL TUBE ASSY | |
| 46 | 112743001 | 1 | クミヒモササエ | WICK HOLDER | |
| 47 | 062670612 | 1 | ナベコ357-40X6 | SCREW, PAN SM3.57-40X6 | |
| 48 | S08993101 | 1 | テンビンイトウケ | HOLDER | |
| 49 | 062670612 | 1 | ナベコ357-40X6 | SCREW, PAN SM3.57-40X6 | |



From the library of: Superior Sewing Machine & Supply LLC

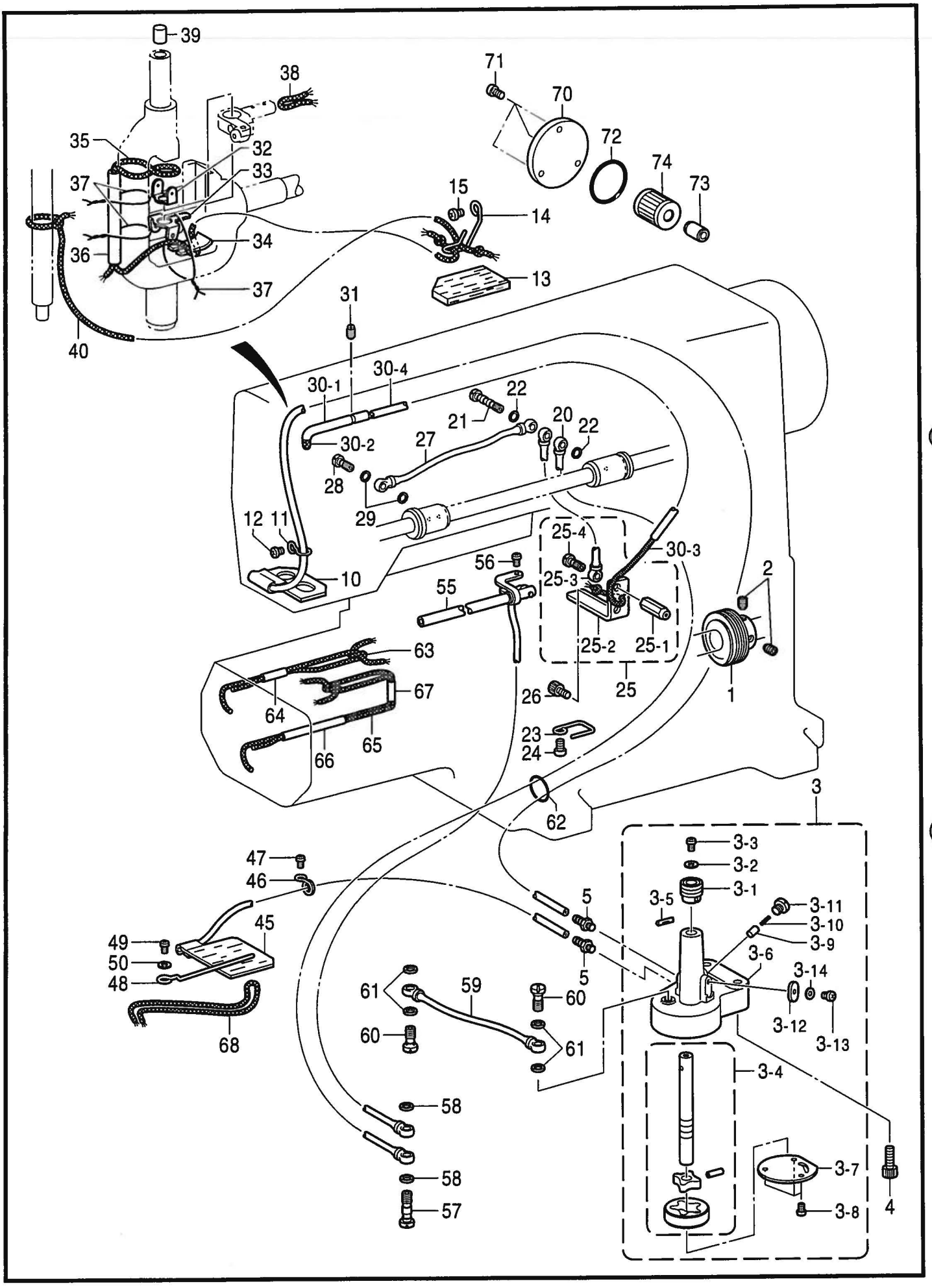


118-291-350



From the library of: Superior Sewing Machine & Supply LLC

| REF.NO. | CODE | Q'TY | ヒンメイ | NAME OF PARTS | RM |
|---|---|---|---|---|---|
| 50 | 105161004 | 1 | ザガネ | WASHER,PLAIN | |
| 55 | S51672001 | 1 | ロッドオイルパイプクミ | OIL PIPE ASSY, ;ROD | |
| 56 | 062670612 | 1 | ナベコ357-40X6 | SCREW, PAN SM3.57-40X6 | |
| 57 | 112364001 | 1 | ハイユパイプツギテネジ | JOINT SCREW | |
| 58 | 159476000 | 2 | ザガネ | WASHER, PLAIN | |
| 59 | S51676001 | 1 | ビニルチユーブクミ | OIL TUBE ASSY | |
| 60 | 112359052 | 2 | ハイユパイプツギテネジ | SCREW | |
| 61 | 159476000 | 4 | ザガネ | WASHER, PLAIN | |
| 62 | 081012070 | 1 | OリングP12 | O RING, P12 | |
| 63 | S51678000 | 1 | クミヒモ3X3(320) | WICK, 3X3 L = 320 | |
| 64 | S51679000 | 1 | ビニルチユーブ | OIL TUBE | |
| 65 | S51680000 | 1 | クミヒモ3X3(400) | WICK, 3X3 L = 400 | |
| 66 | S51681000 | 1 | ビニルチユーブ | OIL TUBE | |
| 67 | S51682000 | 1 | ビニルチユーブ | OIL TUBE | |
| 68 | S51678000 | 1 | クミヒモ3X3(320) | WICK, 3X3 L = 320 | |
| 70 | S12987001 | 1 | オイルフイルターフタ | CAP | |
| 71 | 062680812 | 3 | ナベコ437-40X8 | SCREW, PAN SM4.37-40X8 | |
| 72 | 081044070 | 1 | OリングP44 | O RING, P44 | |
| 73 | S08957001 | 1 | オイルクチ | OIL FEEDING PIPE | |
| 74 | S08956100 | 1 | オイルフイルター | OIL FILTER | |



From the library of: Superior Sewing Machine & Supply LLC

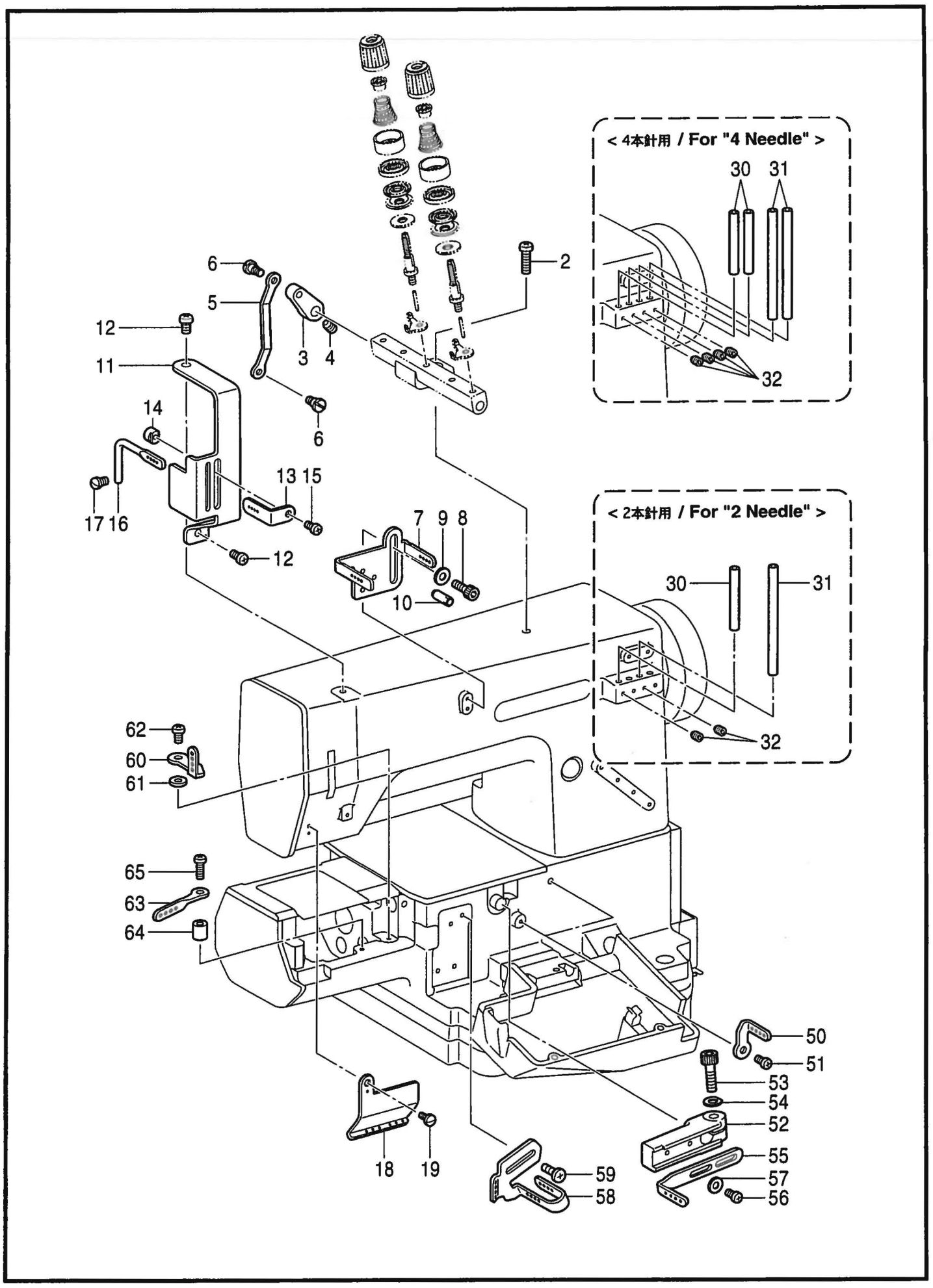


118-291-418



From the library of: Superior Sewing Machine & Supply LLC

| REF.NO. | CODE | Q'TY | ヒンメイ | NAME OF PARTS | RM |
|---|---|---|---|---|---|
| 2 | 062782512 | 1 | ナベコ635-28X25 | SCREW, PAN SM6.35-28X25 | |
| 3 | 105235251 | 1 | イトユルメウデ | TENSION RELEASE CRANK | |
| 4 | 151602002 | 1 | トメネジ4.37 | SET SCREW, SM4.37-40X6 | |
| 5 | 105236001 | 1 | イトユルメレンカン | CONNECTING ROD, ;T-RELEASE | |
| 6 | 105237002 | 2 | ダンネジ3.57 | SHOULDER SCREW, SM3.57 | |
| 7 | S08969201 | 1 | チユウカンイトアンナイ | THREAD GUIDE | |
| 8 | 018680832 | 1 | アナボルト4.37X8 | BOLT, SOCKET SM4.37X8 | |
| 9 | 100645003 | 1 | ザガネ | WASHER | |
| 10 | 143602001 | 1 | ミゾツキピン | PIN, DOWEL | |
| 11 | S51689001 | 1 | ハリボウテンビンカバー | COVER, ;N-BAR & T/TAKE-UP | |
| 12 | 062680712 | 2 | ナベコ437-40X7 | SCREW, PAN SM4.37-40X7 | |
| 13 | S51690001 | 1 | ウワイトアンナイ | THREAD GUIDE, ;UPPER | |
| 14 | S25818051 | 1 | チヨウセツレバーストツパ | STOPPER, ;ADJUSTING LEVER | |
| 15 | 062350612 | 1 | ナベコM3.5X6 | SCREW, PAN M3.5X6 | |
| 16 | S51691001 | 1 | ウワイトテンビン | UPPER THREAD TAKE-UP LEVER | |
| 17 | 100366002 | 1 | マルヒラトメネジ4.37X5 | SET SCREW, (FT) SM4.37X5 | |
| 18 | S51692001 | 1 | ウワイトアンナイD | THREAD GUIDE, D ;UPPER | |
| 19 | 106629002 | 1 | シメネジ4.37 | SCREW, SM4.37 | |
| | | | **＜2本針用＞** | **＜For " 2 Needle "＞** | |
| 30 | 150644009 | 1 | イトアンナイパイプS | THREAD GUIDE PIPE, S | |
| 31 | 150645009 | 1 | イトアンナイパイプL | THREAD GUIDE PIPE, L | |
| 32 | 014680432 | 2 | アナクボミ437-40X4 | SET SCREW, SOCKET (CP) SM4.37 | |
| | | | **＜4本針用＞** | **＜For " 4 Needle "＞** | |
| 30 | 150644009 | 2 | イトアンナイパイプS | THREAD GUIDE PIPE, S | |
| 31 | 150645009 | 2 | イトアンナイパイプL | THREAD GUIDE PIPE, L | |
| 32 | 014680432 | 4 | アナクボミ437-40X4 | SET SCREW, SOCKET (CP) SM4.37 | |
| 50 | S12882001 | 2 | イトアンナイ | THREAD GUIDE | |
| 51 | 062680612 | 2 | ナベコ4.37-40X6 | SCREW, PAN SM4.37-40X6 | |
| 52 | S08977001 | 1 | ハリイトクリレバー | THREAD TAKE-UP LEVER, ;NEEDLE | |
| 53 | 018771432 | 1 | アナボルト635-40X14 | BOLT, SOCKET SM6.35-40X14 | |
| 54 | 155162001 | 1 | スペーサ | SPACER | |
| 55 | S51693001 | 1 | シタイトテンビン | THREAD TAKE-UP, ;L-THREAD | |
| 56 | 062681012 | 2 | ナベコ437-40X10 | SCREW, PAN SM4.37-40X10 | |
| 57 | 100645003 | 2 | ザガネ | WASHER | |
| 58 | S51694001 | 1 | シタイトアンナイ | THREAD GUIDE, ;L-THREAD | |
| 59 | 060680712 | 2 | バインド437-40X7 | SCREW, BIND SM4.37-40X7 | |
| 60 | S12882001 | 1 | イトアンナイ | THREAD GUIDE | |
| 61 | S28075001 | 1 | ハリイタササエイタカラー | COLLAR | |
| 62 | 062680812 | 1 | ナベコ437-40X8 | SCREW, PAN SM4.37-40X8 | |
| 63 | S08981001 | 1 | ハリボウテンビン | THREAD TAKE-UP, ;N-BAR | |
| 64 | S39757001 | 1 | カラー | COLLAR | |
| 65 | 062672012 | 1 | ナベコ357-40X20 | SCREW, PAN SM3.57-40X20 | |



From the library of: Superior Sewing Machine & Supply LLC

< 2本針用 / For "2 Needle" >

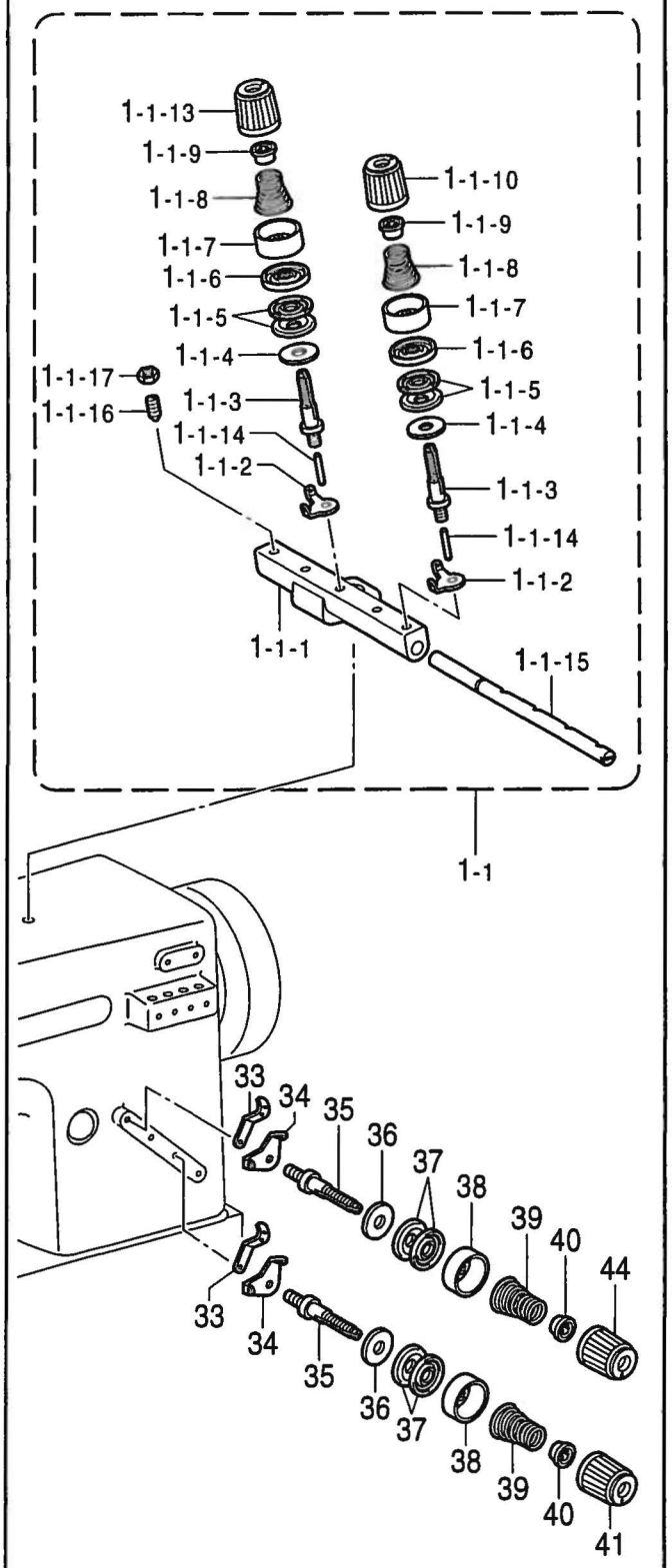


< 4本針用 / For "4 Needle" >

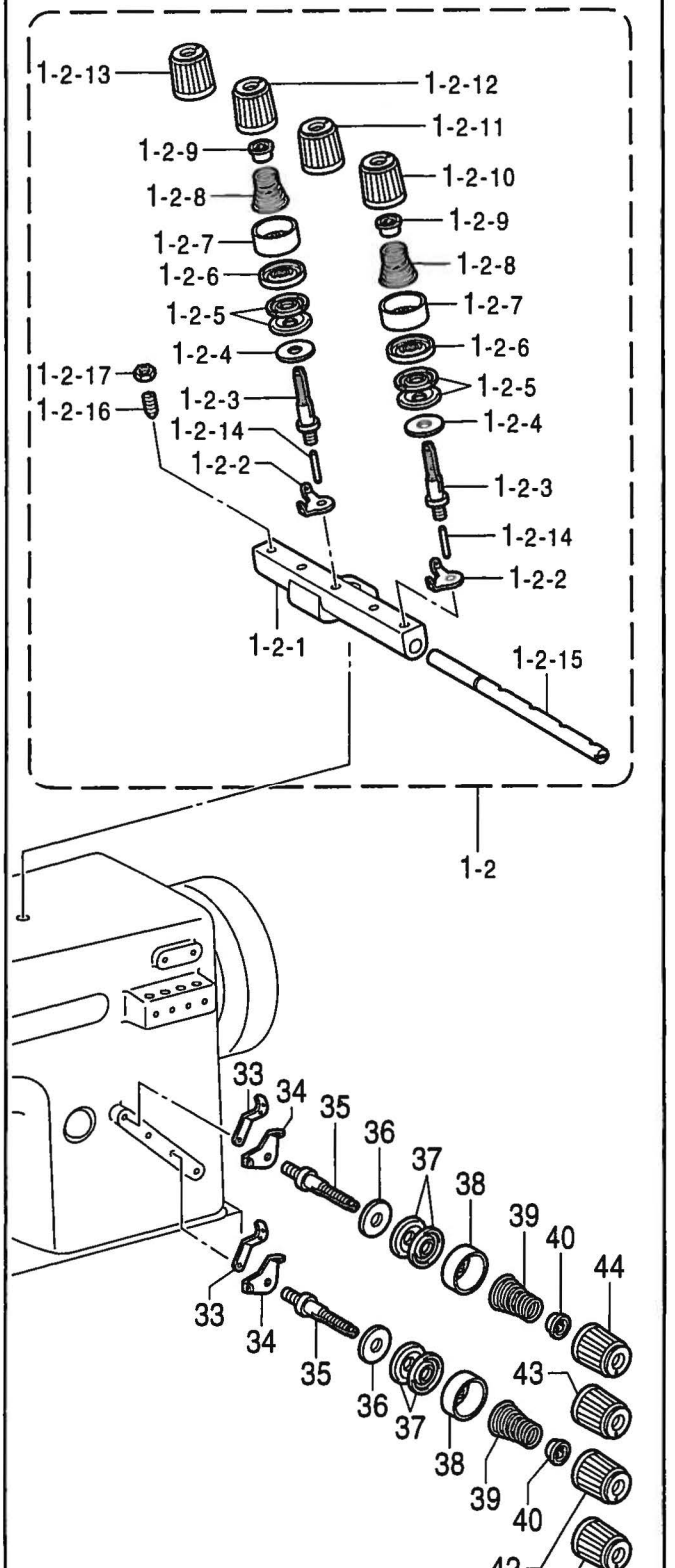


118-291-418



From the library of: Superior Sewing Machine & Supply LLC

| REF.NO. | CODE | Q'TY | ヒンメイ | NAME OF PARTS | RM |
|---|---|---|---|---|---|
| | | | ＜2本針用＞ | ＜For " 2 Needle "＞ | |
| 1-1 | S51685001 | 1 | ウワイトチヨウシダイクミ | UPPER THREAD TENSION ASSY, 2 | |
| 1-1-1 | S51687001 | 1 | ウワイトチヨウシボウダイ | U-THREAD TENSION BRACKET | |
| 1-1-2 | S38737001 | 2 | イトアンナイ | THREAD GUIDE | |
| 1-1-3 | 145440001 | 2 | イトチヨウシボウ | TENSION STUD | |
| 1-1-4 | 110832009 | 2 | イトチヨウシサラフエルト | FELT, ;T-DISC | |
| 1-1-5 | 145446001 | 4 | イトチヨウシサラ | DISC, TENSION | |
| 1-1-6 | 159805001 | 2 | イトチヨウシサラオサエ | DISC PRESSER, ;TENSION | |
| 1-1-7 | 144103009 | 2 | イトチヨウシサラオサエ | DISC PRESSER, ;TENSION | |
| 1-1-8 | 148851001 | 2 | ハリイトチヨウシバネ | TENSION SPRING | |
| 1-1-9 | S30564000 | 2 | チヨウシバネウエザガネ | WASHER | |
| 1-1-10 | S30565002 | 1 | イトチヨウシナツト .... ＜緑＞ | TENSION NUT, GREEN | |
| 1-1-13 | S30565003 | 1 | イトチヨウシナツト .... ＜赤＞ | TENSION NUT, RED | |
| 1-1-14 | 105231000 | 2 | イトユルメピン | TENSION RELEASE PIN | |
| 1-1-15 | S51688001 | 1 | イトユルメジク | SHAFT, ;T-RELEASE | |
| 1-1-16 | 105233002 | 1 | トメネジ4.37 | SET SCREW, SM4.37 | |
| 1-1-17 | 105234003 | 1 | ナツト4.37 | NUT, SM4.37 | |
| 33 | S08963001 | 2 | イトチヨウシダイイトアンナイ | THREAD GUIDE, ;T-BRACKET | |
| 34 | 110813001 | 2 | ハリイトアンナイ | THREAD GUIDE, ;NEEDLE | |
| 35 | 159574101 | 2 | イトチヨウシボウ | TENSION STUD | |
| 36 | 110832009 | 2 | イトチヨウシサラフエルト | FELT, ;T-DISC | |
| 37 | 145446001 | 4 | イトチヨウシサラ | DISC, TENSION | |
| 38 | 144103009 | 2 | イトチヨウシサラオサエ | DISC PRESSER, ;TENSION | |
| 39 | 144110001 | 2 | シタルーパイトチヨウシバネ | TENSION ADJUSTING SPRING | |
| 40 | S30564000 | 2 | チヨウシバネウエザガネ | WASHER | |
| 41 | S30565002 | 1 | イトチヨウシナツト .... ＜緑＞ | TENSION NUT, GREEN | |
| 44 | S30565003 | 1 | イトチヨウシナツト .... ＜赤＞ | TENSION NUT, RED | |
| | | | ＜4本針用＞ | ＜For " 4 Needle "＞ | |
| 1-2 | S51686001 | 1 | ウワイトチヨウシダイクミ | UPPER THREAD TENSION ASSY, 4 | |
| 1-2-1 | S51687001 | 1 | ウワイトチヨウシボウダイ | U-THREAD TENSION BRACKET | |
| 1-2-2 | S38737001 | 4 | イトアンナイ | THREAD GUIDE | |
| 1-2-3 | 145440001 | 4 | イトチヨウシボウ | TENSION STUD | |
| 1-2-4 | 110832009 | 4 | イトチヨウシサラフエルト | FELT, ;T-DISC | |
| 1-2-5 | 145446001 | 8 | イトチヨウシサラ | DISC, TENSION | |
| 1-2-6 | 159805001 | 4 | イトチヨウシサラオサエ | DISC PRESSER, ;TENSION | |
| 1-2-7 | 144103009 | 4 | イトチヨウシサラオサエ | DISC PRESSER, ;TENSION | |
| 1-2-8 | 148851001 | 4 | ハリイトチヨウシバネ | TENSION SPRING | |
| 1-2-9 | S30564000 | 4 | チヨウシバネウエザガネ | WASHER | |
| 1-2-10 | S30565002 | 1 | イトチヨウシナツト .... ＜緑＞ | TENSION NUT, GREEN | |
| 1-2-11 | S30565004 | 1 | イトチヨウシナツト .... ＜黄＞ | TENSION NUT, YELLOW | |
| 1-2-12 | S30565001 | 1 | イトチヨウシナツト .. ＜水色＞ | TENSION NUT, LIGHT BLUE | |
| 1-2-13 | S30565003 | 1 | イトチヨウシナツト .... ＜赤＞ | TENSION NUT, RED | |
| 1-2-14 | 105231000 | 4 | イトユルメピン | TENSION RELEASE PIN | |
| 1-2-15 | S51688001 | 1 | イトユルメジク | SHAFT, ;T-RELEASE | |
| 1-2-16 | 105233002 | 1 | トメネジ4.37 | SET SCREW, SM4.37 | |
| 1-2-17 | 105234003 | 1 | ナツト4.37 | NUT, SM4.37 | |
| 33 | S08963001 | 4 | イトチヨウシダイイトアンナイ | THREAD GUIDE, ;T-BRACKET | |
| 34 | 110813001 | 4 | ハリイトアンナイ | THREAD GUIDE, ;NEEDLE | |
| 35 | 159574101 | 4 | イトチヨウシボウ | TENSION STUD | |
| 36 | 110832009 | 4 | イトチヨウシサラフエルト | FELT, ;T-DISC | |
| 37 | 145446001 | 8 | イトチヨウシサラ | DISC, TENSION | |
| 38 | 144103009 | 4 | イトチヨウシサラオサエ | DISC PRESSER, ;TENSION | |
| 39 | 144110001 | 4 | シタルーパイトチヨウシバネ | TENSION ADJUSTING SPRING | |
| 40 | S30564000 | 4 | チヨウシバネウエザガネ | WASHER | |
| 41 | S30565002 | 1 | イトチヨウシナツト .... ＜緑＞ | TENSION NUT, GREEN | |
| 42 | S30565004 | 1 | イトチヨウシナツト .... ＜黄＞ | TENSION NUT, YELLOW | |
| 43 | S30565001 | 1 | イトチヨウシナツト .. ＜水色＞ | TENSION NUT, LIGHT BLUE | |
| 44 | S30565003 | 1 | イトチヨウシナツト .... ＜赤＞ | TENSION NUT, RED | |



From the library of: Superior Sewing Machine & Supply LLC

M . リテーナ関係 / Retainer mechanism / Haltevorrichtung / Mécanisme de retenue / Mecanismo del retenedor

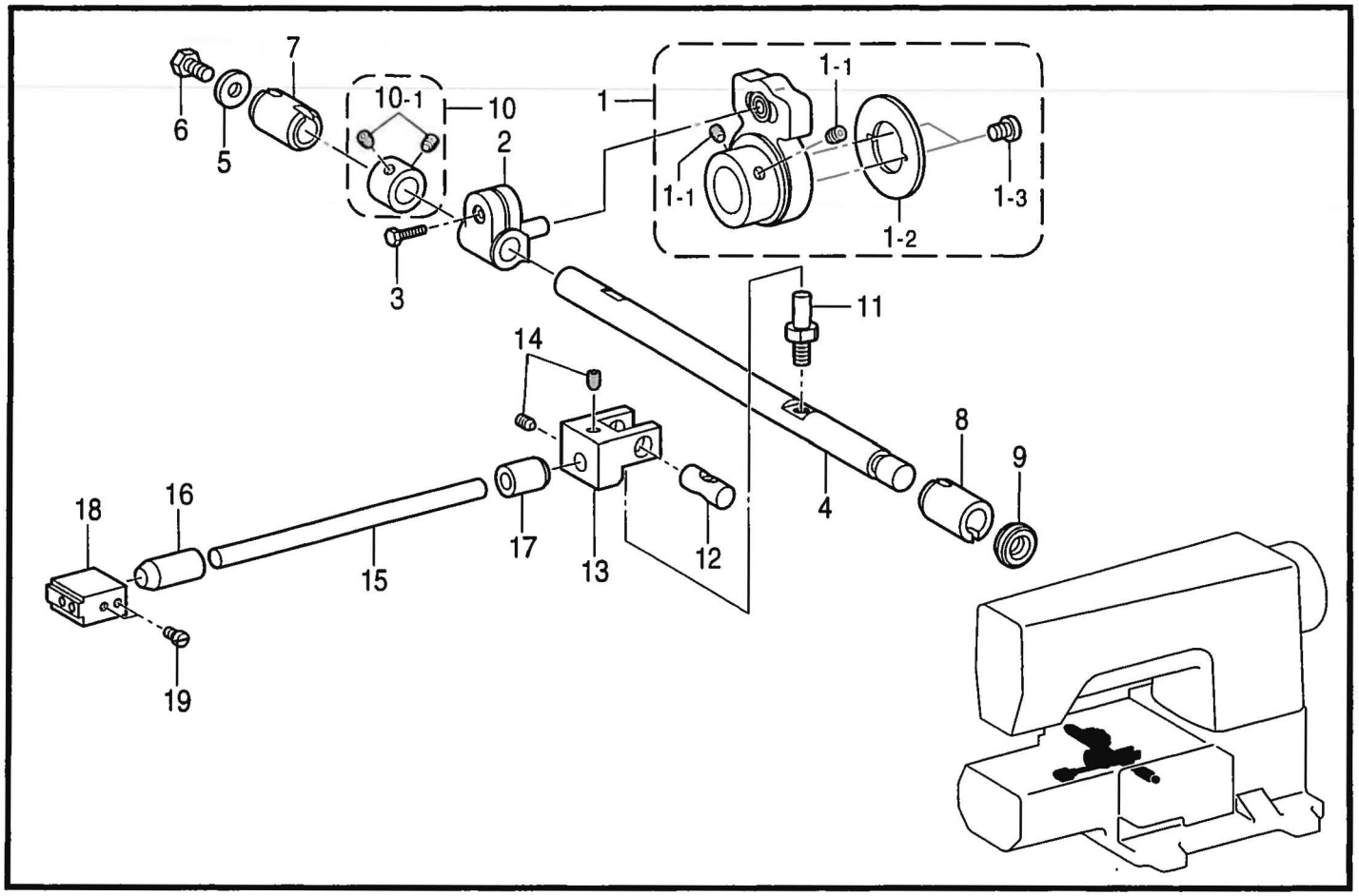


118-291-421

N . 針位置検出器関係 / Synchronizer / Synchronisator / Synchronisateur /Sincronizador

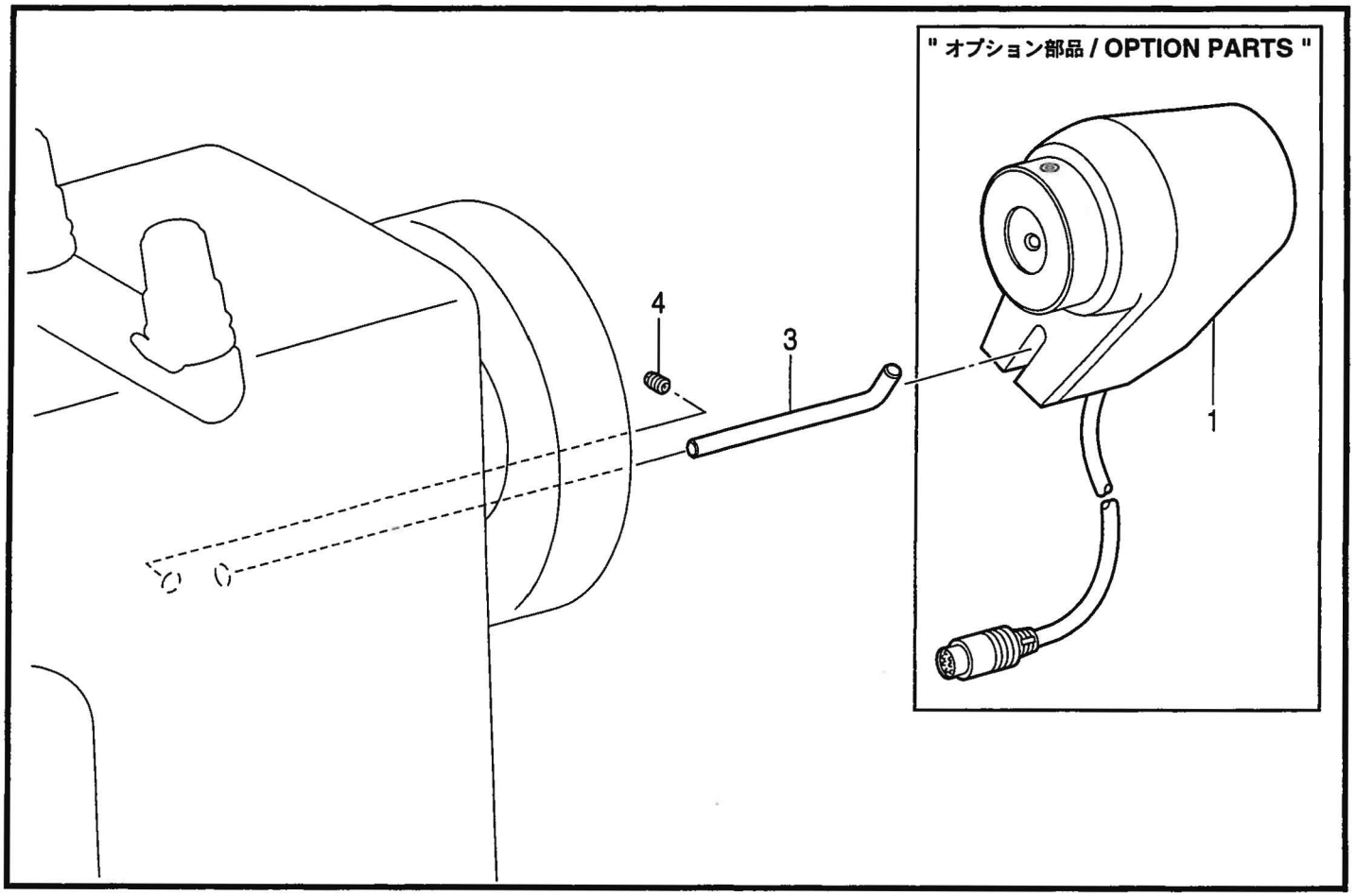


118-291-501



From the library of: Superior Sewing Machine & Supply LLC

## M . リテーナ関係 / Retainer mechanism / Haltevorrichtung / Mécanisme de retenue / Mecanismo del retenedor

| REF.NO. | CODE | Q'TY | ヒンメイ | NAME OF PARTS | RM |
|---|---|---|---|---|---|
| 1 | S51695001 | 1 | リテーナロツドクミ | RETAINER & ROD ASSY | |
| 1-1 | 014770632 | 2 | アナクボミ635-40X6 | SET SCREW, SOCKET(CP) SM6.35X6 | |
| 1-2 | S12821101 | 1 | レンカンオサエ | HOLDER | |
| 1-3 | 062630612 | 2 | ナベコ238-56X6 | SCREW, PAN SM2.38-56X6 | |
| 2 | S51700001 | 1 | リテーナウデ | RETAINER ARM | |
| 3 | 017771412 | 1 | ボルト6.35X14 | BOLT, SM6.35X14 | |
| 4 | S51701101 | 1 | リテーナジク | RETAINER SHAFT | |
| 5 | S00356001 | 1 | ザガネ | WASHER | |
| 6 | S00383001 | 1 | ボルト5.56X8 | BOLT, SM5.56X8 | |
| 7 | S12857000 | 1 | リテーナジクメタルB | BUSH, B ;RETANER SHAFT | |
| 8 | S51702000 | 1 | リテーナジクメタルF | BUSH, F ;RETAINER SHAFT | |
| 9 | S12741000 | 1 | ダストシール | DUST SEAL | |
| 10 | S21754001 | 1 | セツトカラークミ | SET SCREW COLLAR ASSY | |
| 10-1 | 152718001 | 2 | アナトメネジ5.95 | SET SCREW, SOCKET SM5.95X5 | |
| 11 | S51703001 | 1 | リテーナジクピン | PIN | |
| 12 | S51704001 | 1 | リテーナヨウドウピン | ROCKER PIN | |
| 13 | S51705101 | 1 | リテーナボウダイ | BRACKET, ;RETAINER BAR | |
| 14 | 012500532 | 2 | アナヒラ5X5 | SET SCREW, SOCKET (FT) M5X5 | |
| 15 | S51706001 | 1 | リテーナボウ | RETAINER BAR | |
| 16 | S51707000 | 1 | リテーナボウメタルL | BUSH, L ;RETAINER BAR | |
| 17 | S51708000 | 1 | リテーナボウメタルR | BUSH, R ;RETAINER BAR | |
| 18 | S51709001 | 1 | リテーナホルダ | RETAINER HOLDER | |
| 19 | 100366002 | 2 | マルヒラトメネジ4.37X5 | SET SCREW, (FT) SM4.37X5 | |

118-291-421

## N . 針位置検出器関係 / Synchronizer / Synchronisator / Synchronisateur / Sincronizador

| REF.NO. | CODE | Q'TY | ヒンメイ | NAME OF PARTS | RM |
|---|---|---|---|---|---|
| | | | ”オプション部品” | ” OPTION PARTS ” | |
| 1 | J80347001 | 1 | シンクロナイザ#17-2ホ | SYNCHRONIZER, #17-2 | |
| | | | ＜標準部品＞ | ＜Standard parts＞ | |
| 3 | S51711001 | 1 | シンクロナイザガイド | HOLDER BAR | |
| 4 | 151602002 | 1 | トメネジ4.37 | SET SCREW, SM4.37-40X6 | |

118-291-501

From the library of: Superior Sewing Machine & Supply LLC

P . チェンカッタ・クリーナ装置 (オプション部品) / Chain cutter and cleaner device (Option parts) /
Kettenstich-fadenabschneider (Sonderzubehör) /
Coupe-chaînette et despositif de nettoyge (Pieces option) /
Cortacadeneta y dispositivo de limpieza (Piezas opcionales)

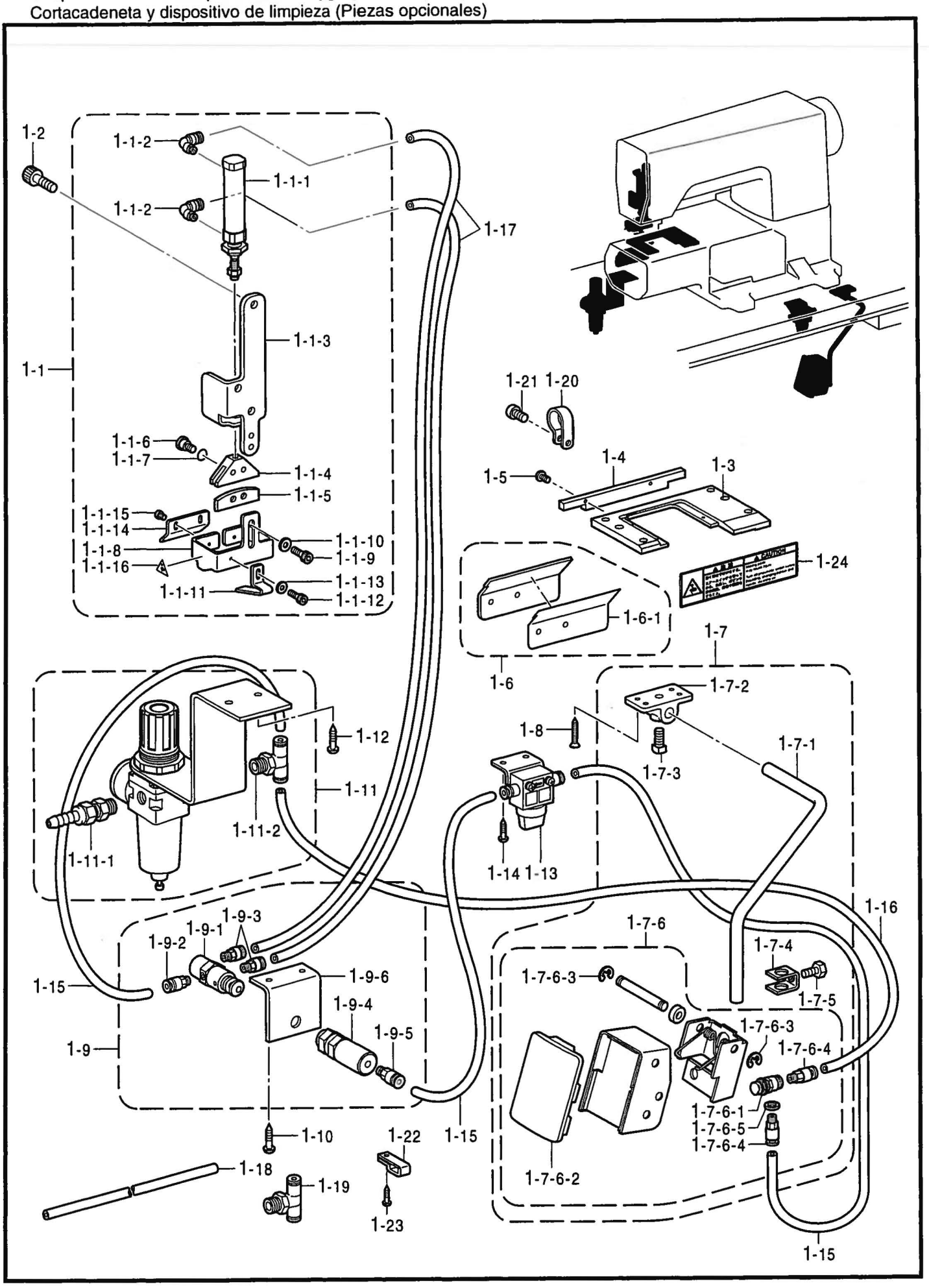


118-291-941



From the library of: Superior Sewing Machine & Supply LLC

P. チェンカッタ･クリーナー装置 (オプション部品) / Chain cutter and cleaner device (Option parts) /
Kettenstich-fadenabschneider (Sonderzubehör) /
Coupe-chaînette et despositif de nettoyge (Pièces en option) /
Cortacadeneta y dispositivo de limpieza (Piezas opcionales)

| REF.NO. | CODE | Q'TY | ヒンメイ | NAME OF PARTS | RM |
|---|---|---|---|---|---|
| 1 | S51748001 | 1 | インパクトカツターセツト | IMPACT CUTTER SET | |
| 1-1 | S51749001 | 1 | インパクトカツタークミ | IMPACT CUTTER ASSY | |
| 1-1-1 | S51750000 | 1 | エアーシリンダー16X30 | AIR CYLINDER, 16X30 | |
| 1-1-2 | S45688000 | 2 | エルボユニオン6M5 | ELBOW UNION, 6M5 | |
| 1-1-3 | S51751101 | 1 | カツタードダイ | CUTTER BRACKET | |
| 1-1-4 | S51752001 | 1 | メスシジタイ | KNIFE HOLDER | |
| 1-1-5 | S51753001 | 1 | カラカンメス | KNIFE | |
| 1-1-6 | 115559002 | 2 | ダンネジ4.76 | SHOULDER SCREW, SM4.76 | |
| 1-1-7 | 081005670 | 2 | OリングPW5 | O RING, PW5 | |
| 1-1-8 | S51754001 | 1 | メスガード | KNIFE GUARD | |
| 1-1-9 | 018501032 | 2 | アナボルト5X10 | BOLT, SOCKET M5X10 | |
| 1-1-10 | 113431002 | 2 | ザガネ | WASHER,PLAIN | |
| 1-1-11 | S51755001 | 1 | ヌノオサエイタ | CLOTH PRESSER PLATE | |
| 1-1-12 | 018680832 | 1 | アナボルト4.37X8 | BOLT, SOCKET SM4.37X8 | |
| 1-1-13 | 100645003 | 1 | ザガネ | WASHER | |
| 1-1-14 | S11630001 | 1 | ウワハガードB | UPPER KNIFE GUARD, B | |
| 1-1-15 | S39086001 | 2 | ナベコ357-40X3.5 | SCREW, PAN SM3.57-40X3.5 | |
| 1-1-16 | S36924001 | 1 | ワーニングマーク | MARK, INJURY | |
| 1-2 | 018061236 | 2 | アナボルト6X12 | BOLT, SOCKET M6X12 | |
| 1-3 | S51756101 | 1 | ハリイタササエイタ | SUPPORT PLATE, N-PLATE | |
| 1-4 | S51757001 | 1 | アテイタ | POSITIONING PLATE | |
| 1-5 | S21716001 | 2 | ボタンヘツドネジ4X10 | SCREW, BUTTON HEAD M4X10 | |
| 1-6 | S51758101 | 1 | シリンダウシロフタSクミ | BACK COVER ASSY, S | |
| 1-6-1 | S51524000 | 1 | シリンダウシロフタパツキン | PACKING | |
| 1-7 | S13064001 | 1 | ヒザスイツチクミ | KNEE LIFTER SWITCH ASSY | |
| 1-7-1 | 147774001 | 1 | ヒザスイツチタテジク | SHAFT, ;K-SWICH | |
| 1-7-2 | 142027001 | 1 | ヒザスイツチタテジクウケ | BRACKET | |
| 1-7-3 | 100463001 | 1 | カクボルト7.94 | BOLT, SQUARE SM7.94 | |
| 1-7-4 | 114967001 | 1 | ヒザアテストツパ | STOPPER, K-LIFTER PLATE | |
| 1-7-5 | 110087001 | 1 | ボルト5.95 | BOLT, SM5.95-28X8 | |
| 1-7-6 | S13065001 | 1 | バルブケースカバークミ | VALVE CASE COVER ASSY | |
| 1-7-6-1 | 147432001 | 1 | エアーバルブ3Pクミ | AIR VALVE ASSY, 3P | |
| 1-7-6-2 | 142032001 | 1 | ヒザスイツチアテゴム | RUBBER | |
| 1-7-6-3 | 048060342 | 2 | トメワE6 | RETAINING RING, E6 | |
| 1-7-6-4 | S04905000 | 2 | ハーフユニオン | HALF UNION | |
| 1-7-6-5 | 147418000 | 2 | パツキン | PACKING | |
| 1-8 | 034422503 | 4 | +サラモクネジ4.1X25 | WOOD SCREW, FLAT M4.1X25 | |
| 1-9 | S51760001 | 1 | エアーバルブクミ | AIR VALVE ASSY | |
| 1-9-1 | 147419001 | 1 | エアーバルブ4Pクミ | AIR VALVE ASSY, 4P | |
| 1-9-2 | S04905000 | 1 | ハーフユニオン | HALF UNION | |
| 1-9-3 | S14145000 | 2 | ハーフユニオン06-M5 | HALF UNION, 06-M5 | |
| 1-9-4 | 147420001 | 1 | エアーバルブ34ARクミ | AIR VALVE ASSY, 34AR | |
| 1-9-5 | S04905000 | 1 | ハーフユニオン | HALF UNION | |
| 1-9-6 | 147421001 | 1 | バルブトリツケイタ | SETTING PLATE, ;VALVE | |
| 1-10 | 101118001 | 2 | マルモクネジ4.5X20 | WOOD SCREW, ROUND M4.5X20 | |
| 1-11 | S13067101 | 1 | エアユニツトクミ | AIR UNIT ASSY | |
| 1-11-1 | 140678000 | 1 | ホースツギテ | JOINT, AIR TUBE | |
| 1-11-2 | S13068000 | 1 | チーズユニオン | T-UNION | |
| 1-12 | 101118001 | 2 | マルモクネジ4.5X20 | WOOD SCREW, ROUND M4.5X20 | |
| 1-13 | S51761000 | 1 | フインガバルブ | VALVE, ;ON-OFF | |
| 1-14 | 031411304 | 2 | マルモクネジ4.1X13 | WOOD SCREW, ROUND M4.1X13 | |
| 1-15 | S11440011 | 3 | エアーチユーブ | AIR TUBE, 4X2.5 L = 520 | |
| 1-16 | S31704000 | 1 | エアーチユーブ4X1260 | AIR TUBE, 4X2.5 L = 1260 | |
| 1-17 | S51762000 | 2 | エアーホース0604S122B | AIR TUBE, 6X4 L = 1220 | |
| 1-18 | S15031002 | 1 | エアーチユーブ | AIR TUBE, 4X2.5 L = 240 | |
| 1-19 | S13068000 | 1 | チーズユニオン | T-UNION | |
| 1-20 | 525567000 | 1 | コードホルダ#8 | CORD HOLDER, 8N | |
| 1-21 | 062681212 | 1 | ナベコ437-40X12 | SCREW, PAN SM4.37-40X12 | |
| 1-22 | 120370001 | 5 | コードホルダA | CORD HOLDER, A | |
| 1-23 | 031311302 | 5 | マルモクネジ3.1X13 | WOOD SCREW, ROUND M3.1X13 | |
| 1-24 | S39085001 | 1 | ソウサチユウイラベル.エアー | LABEL, CAUTION ;OPERATING | |



From the library of: Superior Sewing Machine & Supply LLC

Q1 . エアー押エ上ゲ関係 (オプション部品) / Pneumatic presser foot lifting mechanism (Option parts) /
Pneumatische stoffdrückerfußanhebevorrichtung (Sonderzubehör) /
Dispositif pneumatique de releveur de pied presseur (Pièces en option) /
Levantador neumático del prensatelas (Piezas opcionales)

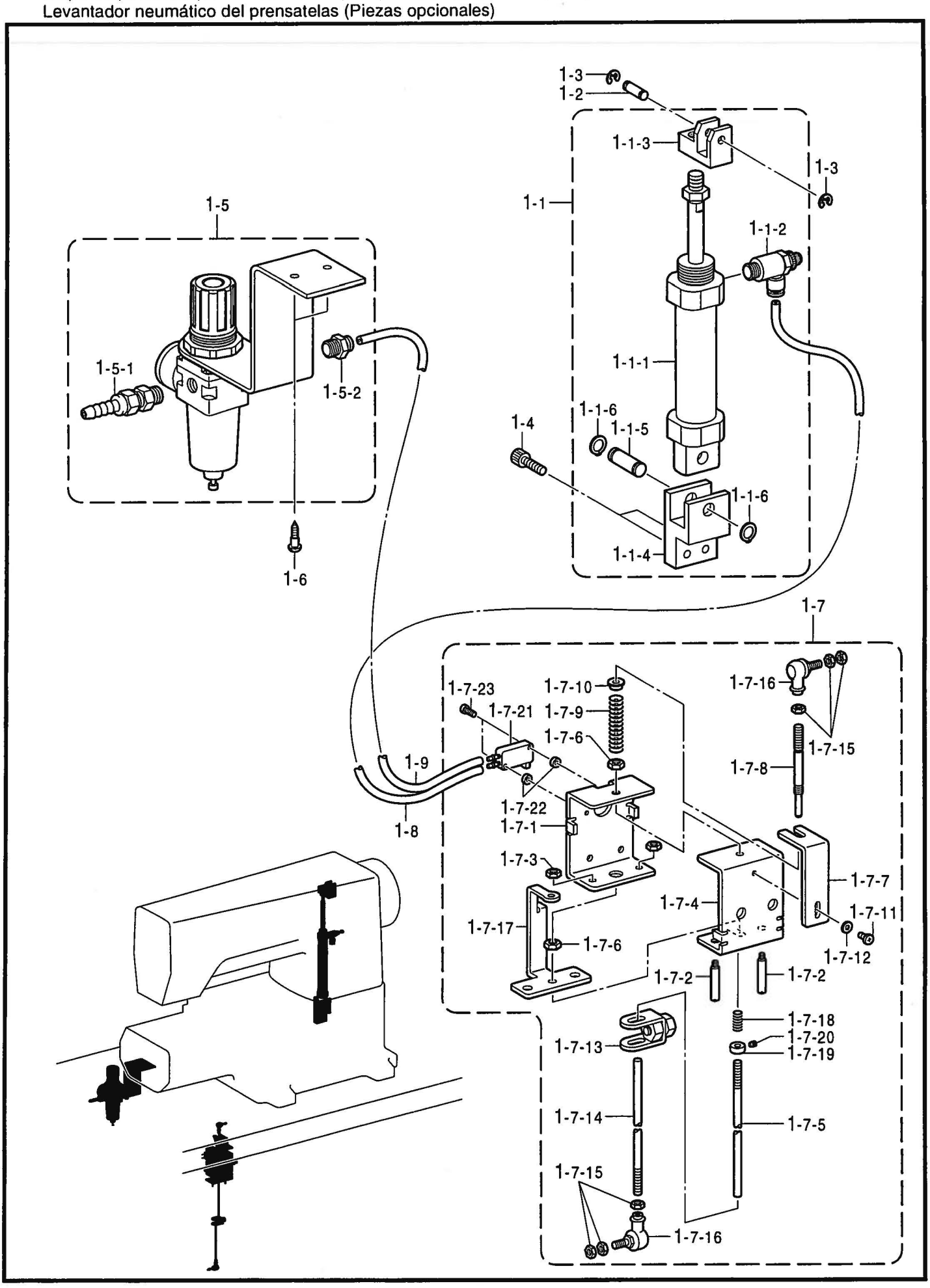


118-291-959



From the library of: Superior Sewing Machine & Supply LLC

Q1. エアー押エ上ゲ関係 (オプション部品) / Pneumatic presser foot lifting mechanism (Option parts) /
Pneumatische stoffdrückerfußanhebevorrichtung (Sonderzubehör) /
Dispositif pneumatique de releveur de pied presseur (Pièces en option) /
Levantador neumático del prensatelas (Piezas opcionales)

| REF.NO. | CODE | Q'TY | ヒンメイ | NAME OF PARTS | RM |
|---|---|---|---|---|---|
| 1 | S51721001 | 1 | オサエアゲセツト | PRESSER FOOT LIFTER SET | |
| 1-1 | S51722001 | 1 | エアーシリンダクミ | AIR CYLINDER ASSY | |
| 1-1-1 | S51723000 | 1 | エアーシリンダ25X35 | AIR CILINDER, 25X35 | |
| 1-1-2 | S23647000 | 1 | スピードコントローラ | SPEED CONTROLLER | |
| 1-1-3 | S51724001 | 1 | シリンダツギテ | CYLINDER JOINT | |
| 1-1-4 | S51725001 | 1 | シリンダドダイ | CYLINDER BRACKET | |
| 1-1-5 | S35219001 | 1 | GSササエピンR | SUPPORT PIN, R ;GS | |
| 1-1-6 | 048080142 | 2 | トメワジクヨウC8 | RETAINING RING, C8 | |
| 1-2 | S35305001 | 1 | シリンダロツドピン | ROD PIN, ;CYLINDER | |
| 1-3 | 048030342 | 2 | トメワE3 | RETAINING RING, E3 | |
| 1-4 | 018401632 | 2 | アナボルト4X16 | BOLT, SOCKET M4X16 | |
| 1-5 | S24493001 | 1 | エアーユニツトクミ | AIR UNIT ASSY | |
| 1-5-1 | 140678000 | 1 | ホースツギテ | JOINT, AIR TUBE | |
| 1-5-2 | S24494000 | 1 | ハーフユニオン | HALF UNION | |
| 1-6 | 101118001 | 2 | マルモクネジ4.5X20 | WOOD SCREW, ROUND M4.5X20 | |
| 1-7 | S24320001 | 1 | レンカンクミ | CONNECTING ROD ASSY | |
| 1-7-1 | S21356001 | 1 | バルブトリツケイタ | SETTING PLATE, ;VALVE | |
| 1-7-2 | S21357001 | 2 | ガイドピン | PIN | |
| 1-7-3 | 021400202 | 2 | 2シユナツト4 | NUT, 2 M4 | |
| 1-7-4 | S21358001 | 1 | バルブサドウイタ | MOVING PLATE, ;VAVLE | |
| 1-7-5 | 146695001 | 1 | レンカンナカ | CONNECTING ROD, INNER | |
| 1-7-6 | 021060302 | 2 | ナツト3シユ6 | NUT, 3 M6 | |
| 1-7-7 | S21359001 | 1 | バネチヨウセツイタ | ADJUSTING PLATE, ;SPRING | |
| 1-7-8 | S21360001 | 1 | レンカンU | CONNECTING ROD, U | |
| 1-7-9 | S21361001 | 1 | オシバネA | SPRING, A ;COMPRESION | |
| 1-7-10 | S21362000 | 1 | バネウケ | SPRING HOLDER | |
| 1-7-11 | 060400612 | 1 | バインドM4X6 | SCREW, BIND M4X6 | |
| 1-7-12 | 025040236 | 1 | ヒラザガネチユウ4 | WASHER, PLAIN M 4 | |
| 1-7-13 | 181225001 | 1 | レンカンダキクミ | CONNECTING ROD CLAMP ASSY | |
| 1-7-14 | 146695001 | 1 | レンカンナカ | CONNECTING ROD, INNER | |
| 1-7-15 | 021060302 | 6 | ナツト3シユ6 | NUT, 3 M6 | |
| 1-7-16 | 119712001 | 2 | ジヨイントクミ | JOINT ASSY | |
| 1-7-17 | S24322001 | 1 | スイツチイタ | SWITCH PLATE | |
| 1-7-18 | S24324001 | 1 | コイルバネ | SPRING, COMPRESSION | |
| 1-7-19 | S24325001 | 1 | セツトカラー | SET SCREW COLLAR | |
| 1-7-20 | 012400532 | 1 | アナヒラ4X5 | SET SCREW, SOCKET (FT) M4X5 | |
| 1-7-21 | S24323000 | 1 | メカバルブ | MECHANICAL VALVE | |
| 1-7-22 | 115076001 | 2 | イトサバキリンクコロ | ROLLER | |
| 1-7-23 | 002301615 | 2 | +ナベコ3X16 | SCREW, PAN M3X16 | |
| 1-8 | S51726100 | 1 | エアホース0425U110B | AIR TUBE, 4 L = 1100 | |
| 1-9 | S51727000 | 1 | エアホース0425U050B | AIR TUBE, 4 L = 500 | |



From the library of: Superior Sewing Machine & Supply LLC

Q2 . エアー押工上ゲ関係 (オプション部品) / Pneumatic presser foot lifting mechanism (Option parts) /
Pneumatische stoffdrückerfußanhebevorrichtung (Sonderzubehör) /
Dispositif pneumatique de releveur de pied presseur (Pièces en option) /
Levantador neumático del prensatelas (Piezas opcionales)

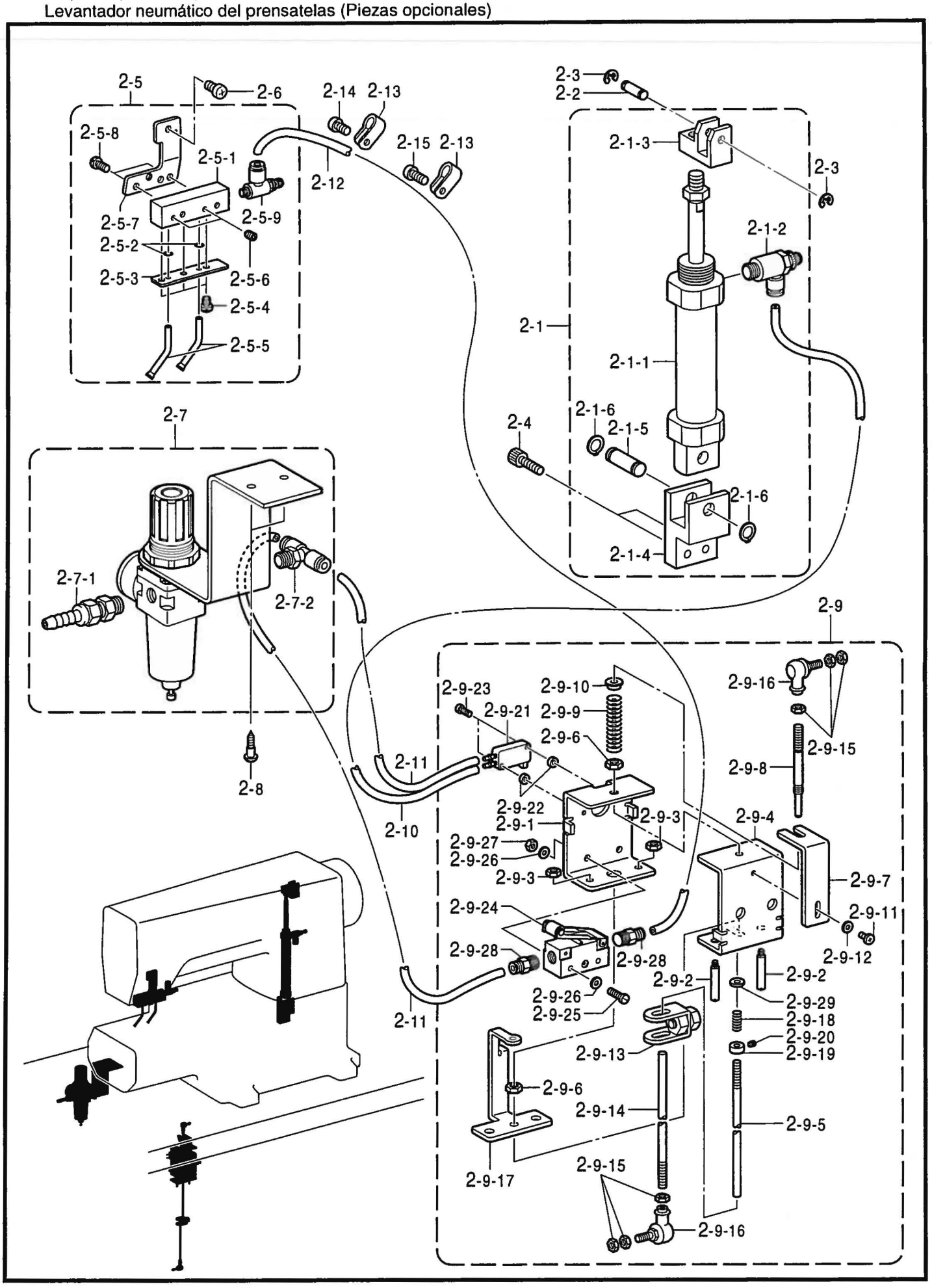


118-291-959



From the library of: Superior Sewing Machine & Supply LLC

Q2 . エアー押エ上ゲ関係 (オプション部品) / Pneumatic presser foot lifting mechanism (Option parts) /
Pneumatische stoffdrückerfußanhebevorrichtung (Sonderzubehör) /
Dispositif pneumatique de releveur de pied presseur (Pièces en option) /
Levantador neumático del prensatelas (Piezas opcionales)

| REF.NO. | CODE | Q'TY | ヒンメイ | NAME OF PARTS | RM |
|---|---|---|---|---|---|
| 2 | S51735001 | 1 | オサエアゲ.クーラーセツト | P-F/LIFTER & N/COOLER SET | |
| 2-1 | S51722001 | 1 | エアーシリンダクミ | AIR CYLINDER ASSY | |
| 2-1-1 | S51723000 | 1 | エアーシリンダ25X35 | AIR CILINDER, 25X35 | |
| 2-1-2 | S23647000 | 1 | スピードコントローラ | SPEED CONTROLLER | |
| 2-1-3 | S51724001 | 1 | シリンダツギテ | CYLINDER JOINT | |
| 2-1-4 | S51725001 | 1 | シリンダドダイ | CYLINDER BRACKET | |
| 2-1-5 | S35219001 | 1 | GSササエピンR | SUPPORT PIN, R ;GS | |
| 2-1-6 | 048080142 | 2 | トメワジクヨウC8 | RETAINING RING, C8 | |
| 2-2 | S35305001 | 1 | シリンダロツドピン | ROD PIN, ;CYLINDER | |
| 2-3 | 048030342 | 2 | トメワE3 | RETAINING RING, E3 | |
| 2-4 | 018401632 | 2 | アナボルト4X16 | BOLT, SOCKET M4X16 | |
| 2-5 | S51736001 | 1 | ニードルクーラークミ | NEEDLE COOLER ASSY | |
| 2-5-1 | S51737001 | 1 | ニードルクーラータイ | BODY, ;N-COOLER | |
| 2-5-2 | 081003070 | 2 | Oリング P3 | O RING,P3 | |
| 2-5-3 | S51738001 | 1 | Oリングオサエイタ | HOLDER, ;O RING | |
| 2-5-4 | 100242003 | 3 | シメネジ3.57 | SCREW, SM3.57-40X5 | |
| 2-5-5 | S51739001 | 2 | ニードルクーラー | NEEDLE COOLER | |
| 2-5-6 | 146427001 | 2 | アナトメネジ3.18クボミ | SET SCREW, SOCKET (CP) SM3.18 | |
| 2-5-7 | S51740001 | 1 | ニードルクーラートリツケイタ | SETTING PLATE, ;N-COOLER | |
| 2-5-8 | S13385001 | 2 | シメネジ3.57X10 | SCREW, SM3.57-40X10 | |
| 2-5-9 | S23660000 | 1 | スピードコントローラ | SPEED CONTROLLER | |
| 2-6 | 062681012 | 1 | ナベコ437-40X10 | SCREW, PAN SM4.37-40X10 | |
| 2-7 | S13067001 | 1 | エアユニツトクミ | AIR UNIT ASSY | |
| 2-7-1 | 140678000 | 1 | ホースツギテ | JOINT, AIR TUBE | |
| 2-7-2 | S13068000 | 1 | チーズユニオン | T-UNION | |
| 2-8 | 101118001 | 2 | マルモクネジ4.5X20 | WOOD SCREW, ROUND M4.5X20 | |
| 2-9 | S51741001 | 1 | レンカンクミ | CONNECTING ROD ASSY | |
| 2-9-1 | S21356001 | 1 | バルブトリツケイタ | SETTING PLATE, ;VALVE | |
| 2-9-2 | S21357001 | 2 | ガイドピン | PIN | |
| 2-9-3 | 021400202 | 2 | 2シユナツト4 | NUT, 2 M4 | |
| 2-9-4 | S21358001 | 1 | バルブサドウイタ | MOVING PLATE, ;VAVLE | |
| 2-9-5 | 146695001 | 1 | レンカンナカ | CONNECTING ROD, INNER | |
| 2-9-6 | 021060302 | 2 | ナツト3シユ6 | NUT, 3 M6 | |
| 2-9-7 | S21359001 | 1 | バネチヨウセツイタ | ADJUSTING PLATE, ;SPRING | |
| 2-9-8 | S21360001 | 1 | レンカンU | CONNECTING ROD, U | |
| 2-9-9 | S21361001 | 1 | オシバネA | SPRING, A ;COMPRESION | |
| 2-9-10 | S21362000 | 1 | バネウケ | SPRING HOLDER | |
| 2-9-11 | 060400612 | 1 | バインドM4X6 | SCREW, BIND M4X6 | |
| 2-9-12 | 025040236 | 1 | ヒラザガネチユウ4 | WASHER, PLAIN M 4 | |
| 2-9-13 | 181225001 | 1 | レンカンダキクミ | CONNECTING ROD CLAMP ASSY | |
| 2-9-14 | 146695001 | 1 | レンカンナカ | CONNECTING ROD, INNER | |
| 2-9-15 | 021060302 | 6 | ナツト3シユ6 | NUT, 3 M6 | |
| 2-9-16 | 119712001 | 2 | ジヨイントクミ | JOINT ASSY | |
| 2-9-17 | S24322001 | 1 | スイツチイタ | SWITCH PLATE | |
| 2-9-18 | S24324001 | 1 | コイルバネ | SPRING, COMPRESSION | |
| 2-9-19 | S24325001 | 1 | セツトカラー | SET SCREW COLLAR | |
| 2-9-20 | 012400532 | 1 | アナヒラ4X5 | SET SCREW, SOCKET (FT) M4X5 | |
| 2-9-21 | S24323000 | 1 | メカバルブ | MECHANICAL VALVE | |
| 2-9-22 | 115076001 | 2 | イトサバキリンクコロ | ROLLER | |
| 2-9-23 | 002301615 | 2 | +ナベコ3X16 | SCREW, PAN M3X16 | |
| 2-9-24 | S01561000 | 1 | メカバルブ | MECANICAL VALVE | |
| 2-9-25 | 007402516 | 2 | ヒラネジ4X25 | SCREW, FLAT M4X25 | |
| 2-9-26 | 025040236 | 4 | ヒラザガネチユウ4 | WASHER, PLAIN M 4 | |
| 2-9-27 | 021400106 | 2 | ナツト1シユ4 | NUT, 1 M4 | |
| 2-9-28 | S04910000 | 2 | ハーフユニオン | HALF UNION, ;KQH04-01S | |
| 2-9-29 | 155559001 | 1 | ヒラザガネ | WASHER, PLAIN | |
| 2-10 | S51726100 | 1 | エアホース0425U110B | AIR TUBE, 4 L = 1100 | |
| 2-11 | S51727000 | 2 | エアホース0425U050B | AIR TUBE, 4 L = 500 | |
| 2-12 | S31704000 | 1 | エアーチューブ4X1260 | AIR TUBE, 4X2.5 L = 1260 | |
| 2-13 | S10243000 | 2 | ナイロンクランプNK-3N | CORD HOLDER, ;NK-3N | |
| 2-14 | 062681012 | 1 | ナベコ437-40X10 | SCREW, PAN SM4.37-40X10 | |
| 2-15 | 062681212 | 1 | ナベコ437-40X12 | SCREW, PAN SM4.37-40X12 | |



From the library of: Superior Sewing Machine & Supply LLC

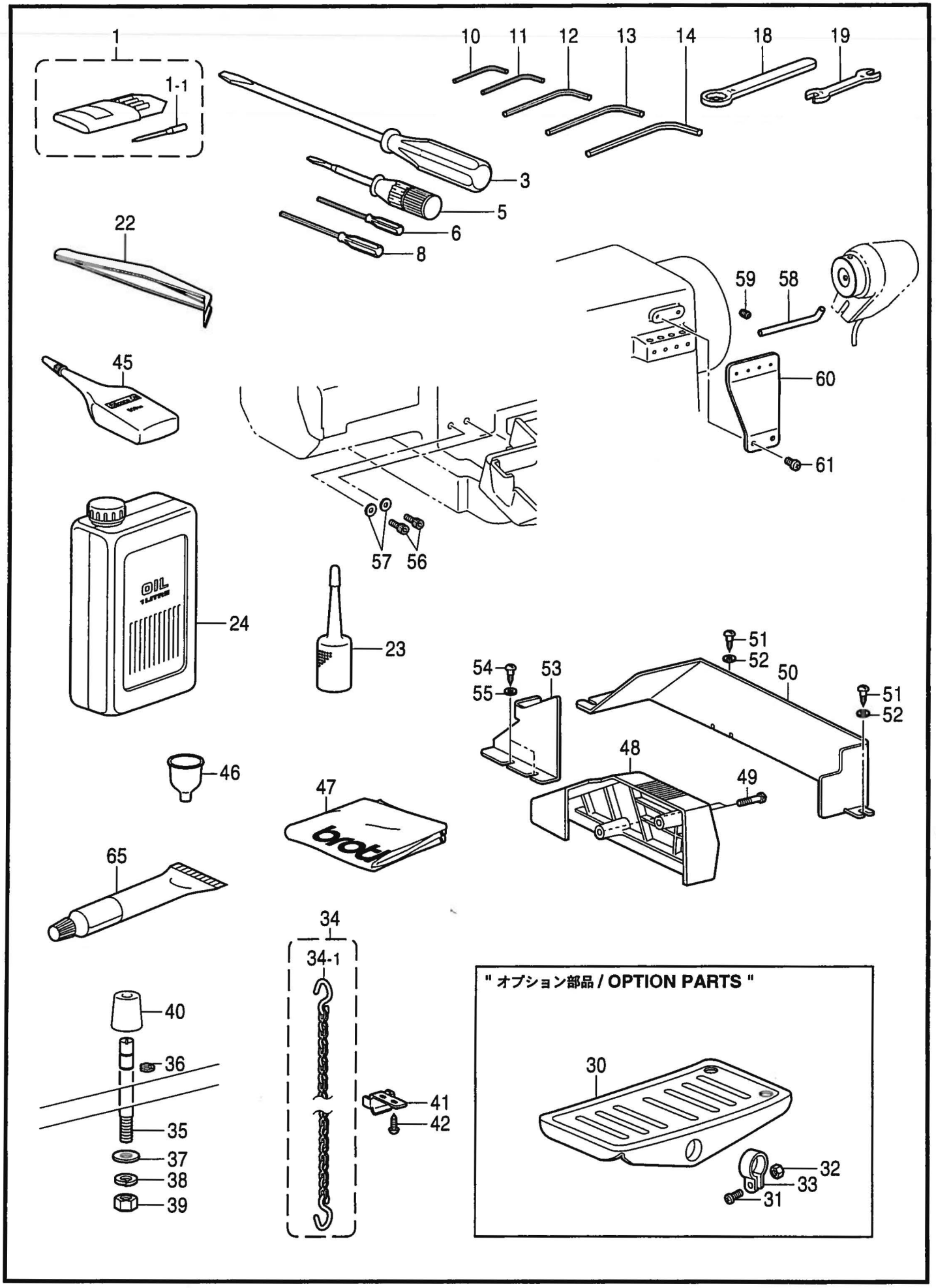


118-291-910



From the library of: Superior Sewing Machine & Supply LLC

| REF.NO. | CODE | Q'TY | ヒンメイ | NAME OF PARTS | RM |
|---|---|---|---|---|---|
| 1 | S51594422 | 1 | ミシンハリDV57クミ | NEEDLE ASSY, DV57 (NM140) | |
| 1-1 | S51594022 | 4 | ミシンハリDV57 | NEEDLE, DV57 (NM140) | |
| 3 | 118837001 | 1 | ネジマワシ3.4X70 | SCREW DRIVER, 3.4X70 | |
| 5 | 101572101 | 1 | ネジマワシ5.5X190 | SCREW DRIVER, 5.5X190 | |
| 6 | S01943001 | 1 | 6カクボウネジマワシ1.6 | SCREW DRIVER, HEX. 1.6 | |
| 8 | S23806001 | 1 | 6カクボウネジマワシ2.5 | SCREW DRIVER 2.5 | |
| 10 | S07783001 | 1 | 6カクボウスパナ1.5 | HEXAGONAL WRENCH, 1.5 | |
| 11 | 142002001 | 1 | 6カクボウスパナ2 | HEXAGONAL WRENCH, 2 | |
| 12 | 142721001 | 1 | 6カクボウスパナ3 | ALLEN WRENCH 3 | |
| 13 | 154179001 | 1 | 6カクボウスパナ4 | HEXAGONAL WRENCH, 4 | |
| 14 | 150335001 | 1 | 6カクボウスパナ5 | HEXAGONAL WRENCH, 5 | |
| 18 | S51712001 | 1 | メガネレンチ14 | WRENCH, 14 | |
| 19 | 107779001 | 1 | スパナ6X7 | WRENCH, 6X7 | |
| 22 | 117466000 | 1 | ピンセット | PINCETTE | |
| 23 | S06701000 | 1 | ポリオイラークミ | POLY OILER ASSY | |
| 24 | S55666002 | 1 | オイルタンクBクミ | OIL TANK ASSY, B | |
| 34 | 105333001 | 1 | クサリAクミ | CHAIN ASSY, A | |
| 34-1 | 105335001 | 1 | クサリカケカネS | CHAIN HOOK, S | |
| 35 | S28441001 | 4 | ボウシンゴムピン | RUBBER CUSHION PIN | |
| 36 | S28442001 | 4 | トメワU5 | RETAINING RING, U5 | |
| 37 | 025060236 | 4 | ヒラザガネチユウ6 | WASHER, PLAIN M 6 | |
| 38 | 028060242 | 4 | バネザガネ2-6 | WASHER, SPRING 2-6 | |
| 39 | 021060106 | 4 | 1シユナット6 | NUT, 1 M6 | |
| 40 | 147919052 | 4 | ボウシンゴム | RUBBER CUSHION | |
| 41 | S09001101 | 1 | クサリガイド | CHAIN GUIDE | |
| 42 | 032461606 | 2 | +マルモクネジ4.5X16 | WOOD SCREW, ROUND M4.5X16 | |
| 45 | S06704001 | 1 | シリコンオイル | SILICONE OIL | |
| 46 | S20769000 | 1 | ジョーゴ | FUNNEL | |
| 47 | 144224001 | 1 | トウブカバー | HEAD COVER | |
| 48 | S09002009 | 1 | ベルトカバー | BELT COVER | |
| 49 | 102424004 | 2 | シメネジ4.37 | SCREW, SM4.37-40X23 | |
| 50 | S28444001 | 1 | ホジヨベルトカバー | SUB BELT COVER | |
| 51 | 100666002 | 3 | マルモクネジ5.5X20 | WOOD SCREW, ROUND M5.5X20 | |
| 52 | 025750132 | 3 | ヒラザガネシヨウ5.56 | WASHER, PLAIN S 5.56 | |
| 53 | S51713001 | 1 | ベルトカバーホジヨイタ | AUXILIARY PLATE, ;B-COVER | |
| 54 | 100666002 | 2 | マルモクネジ5.5X20 | WOOD SCREW, ROUND M5.5X20 | |
| 55 | 025750132 | 2 | ヒラザガネシヨウ5.56 | WASHER, PLAIN S 5.56 | |
| 56 | 018502222 | 2 | アナボルト5X22 | BOLT, SOCKET M5X22 | |
| 57 | S20246001 | 2 | ヒラザガネダイ5 | WASHER, PLAIN L 5 | |
| 58 | S51711001 | 1 | シンクロナイザガイド | HOLDER BAR | |
| 59 | 151602002 | 1 | トメネジ4.37 | SET SCREW, SM4.37-40X6 | |
| 60 | S51714001 | 1 | シタイトアンナイU | THREAD GUIDE, U | |
| 61 | 062680812 | 2 | ナベコ437-40X8 | SCREW, PAN SM4.37-40X8 | |
| 65 | S09021100 | 1 | グリス | GREASE | |
| | | | " オプション部品 " | " OPTION PARTS " | |
| 30 | 147893009 | 1 | オサエアゲフミイタ | TREADLE PEDAL | |
| 31 | 021400106 | 2 | ナット1シユ4 | NUT, 1 M4 | |
| 32 | 062401406 | 2 | ナベコ4X14 | SCREW, PAN M4X14 | |
| 33 | 116016001 | 2 | ペタルトメ | PEDAL STOPPER | |

118-291-910

◎ 付属品の明細は変更することがあります。
◎ The details of included accessories are subject to change.
◎ Änderungen in der Aufstellung der Mitgelieferten Zubehöre sind vorbehalten.
◎ Les détails des accessoires inclus sont sujets à des changements.
◎ Los detalles des accesorios incluídos pueden variar.

From the library of: Superior Sewing Machine & Supply LLC

< 2本針用 / For "2 Needle" >

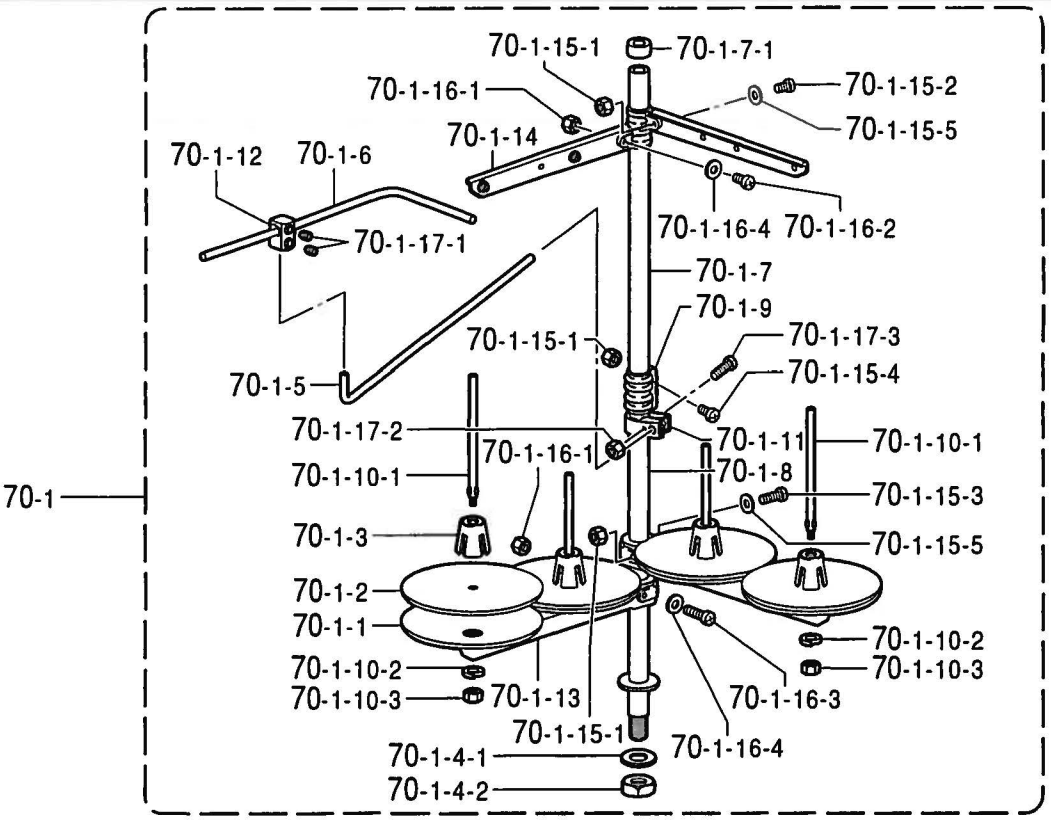


< 4本針用 / For "4 Needle" >

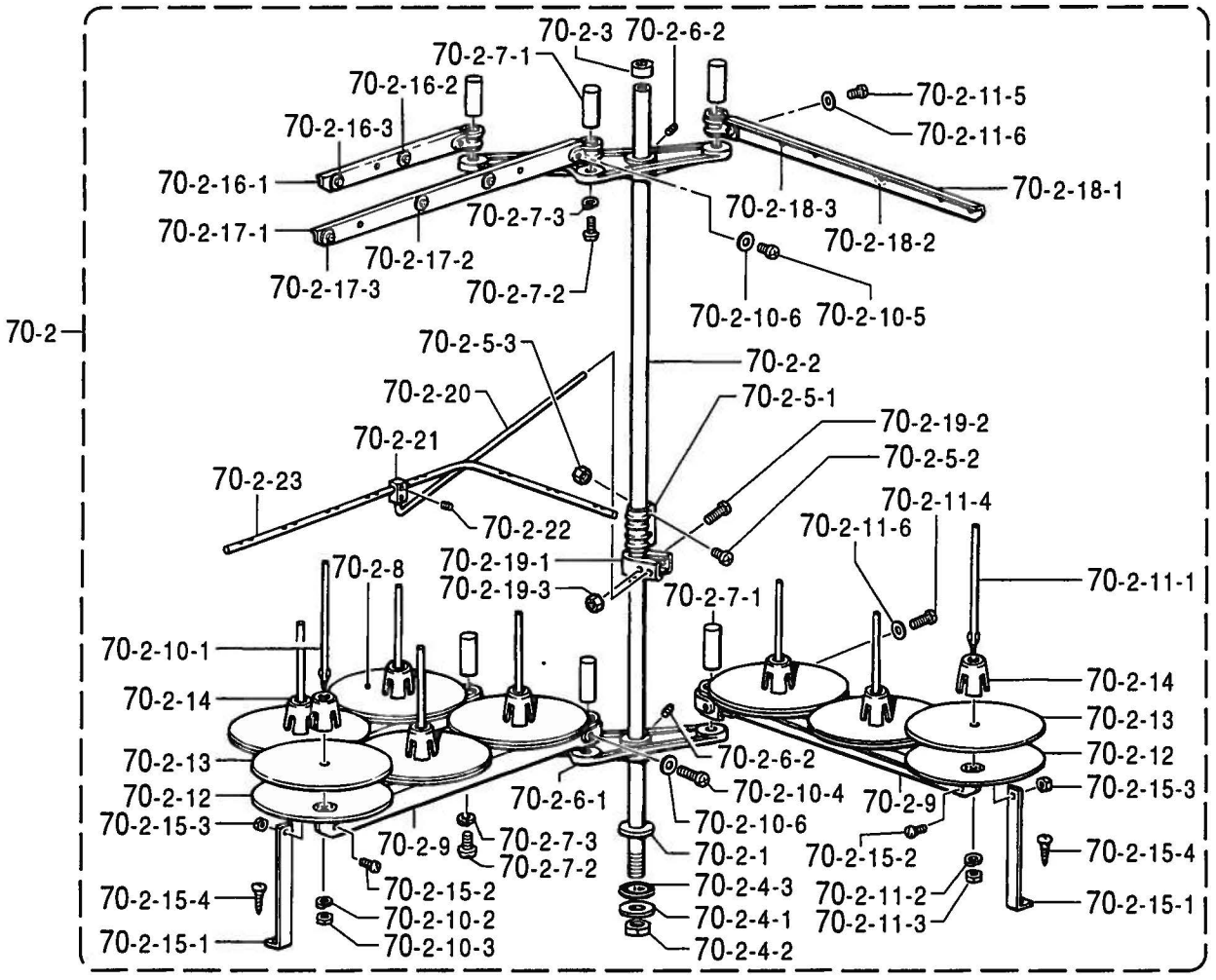


118-291-910



From the library of: Superior Sewing Machine & Supply LLC

| REF.NO. | CODE | Q'TY | ヒンメイ | NAME OF PARTS | RM |
|---|---|---|---|---|---|
| | | | ＜2本針用＞ | ＜For " 2 Needle "＞ | |
| 70-1 | S29854209 | 1 | イトタテダイクミ4DTHF | COTTON STAND ASSY, 4DTHF W/BOX | |
| 70-1-1 | S51283001 | 4 | ウケザラ | SPOOL STAND BASE | |
| 70-1-2 | 150182000 | 4 | スプールマツト | SPOOL MAT | |
| 70-1-3 | S51282001 | 4 | スプールクツシヨン | SPOOL CUSHION | |
| 70-1-4 | S02775001 | 1 | パイプネジセツトA | PIPE SCREW SET, A | |
| 70-1-4-1 | 150206002 | 1 | ヒラザガネ16 | WASHER, PLAIN 16 | |
| 70-1-4-2 | S38648001 | 1 | 6カクナットU5/8 | NUT, U5/8-28 | |
| 70-1-5 | S04109001 | 1 | イトアンナイササエボウ | SUPPORT BAR, ;TR-GUIDE | |
| 70-1-6 | 142998101 | 1 | イトアンナイ4 | THREAD GUIDE, 4 | |
| 70-1-7 | S40640001 | 1 | コラムパイプキヤツプツキ | COLUMN PIPE W/CAP | |
| 70-1-7-1 | 150174000 | 1 | コラムキヤツプ | COLUMN CAP | |
| 70-1-8 | 156112003 | 1 | コラムパイプD | COLUMN PIPE, D | |
| 70-1-9 | 150173003 | 1 | コラムジヨイント | COLUMN JOINT | |
| 70-1-10 | S21798001 | 4 | スプールネジセツト | SPOOL & SCREW SET | |
| 70-1-10-1 | 150179002 | 4 | スプールジクB | SPOOL SHAFT, B | |
| 70-1-10-2 | 028050246 | 4 | バネザガネ2-5 | WASHER, SPRING 2-5 | |
| 70-1-10-3 | 021500106 | 4 | 1シユナツト5 | NUT, 1 M5 | |
| 70-1-11 | 150185009 | 1 | イトアンナイホルダー | THREAD GUIDE HOLDER | |
| 70-1-12 | 138843001 | 1 | ササエボウツギテ | JOINT | |
| 70-1-13 | S02778002 | 2 | スプールホルダー2 | SPOOL HOLDER, 2 | |
| 70-1-14 | S02786002 | 2 | スレツドハンガークミ2 | THREAD HANGER ASSY, 2 | |
| 70-1-15 | S40641001 | 1 | スプールジクネジセツトA | SPOOL SHAFT & SCREW SET, A | |
| 70-1-15-1 | 021500106 | 4 | 1シユナツト5 | NUT, 1 M5 | |
| 70-1-15-2 | 062501406 | 1 | ナベコ5X14 | SCREW, PAN M5X14 | |
| 70-1-15-3 | 062503506 | 1 | ナベコM5X35 | SCREW, PAN M5X35 | |
| 70-1-15-4 | 062501406 | 2 | ナベコ5X14 | SCREW, PAN M5X14 | |
| 70-1-15-5 | 026050136 | 2 | ヒラザガネコガタ5 | WASHER, PLAIN S 5 | |
| 70-1-16 | S40642001 | 1 | スプールジクネジセツトB | SPOOL SHAFT & SCREW SET, B | |
| 70-1-16-1 | 021500106 | 2 | 1シユナツト5 | NUT, 1 M5 | |
| 70-1-16-2 | 062501406 | 1 | ナベコ5X14 | SCREW, PAN M5X14 | |
| 70-1-16-3 | 062503506 | 1 | ナベコM5X35 | SCREW, PAN M5X35 | |
| 70-1-16-4 | 026050136 | 2 | ヒラザガネコガタ5 | WASHER, PLAIN S 5 | |
| 70-1-17 | S40643001 | 1 | ホルダーツギテネジセツト | HOLDER JOINT & SCREW SET | |
| 70-1-17-1 | 014060632 | 2 | アナクボミ6X6 | SET SCREW, SOCKET (CP) M6X6 | |
| 70-1-17-2 | 021500106 | 1 | 1シユナツト5 | NUT, 1 M5 | |
| 70-1-17-3 | 062503506 | 1 | ナベコM5X35 | SCREW, PAN M5X35 | |
| | | | ＜4本針用＞ | ＜For " 4 Needle "＞ | |
| 70-2 | S12810109 | 1 | イトタテダイクミ8TH | COTTON STAND ASSY, 8TH | |
| 70-2-1 | 156112003 | 1 | コラムパイプD | COLUMN PIPE, D | |
| 70-2-2 | 150172003 | 1 | コラムパイプ | COLUMN PIPE | |
| 70-2-3 | 150174000 | 1 | コラムキヤツプ | COLUMN CAP | |
| 70-2-4 | S13794001 | 1 | パイプネジセツトA | PIPE & SCREW SET, A | |
| 70-2-4-1 | 150206000 | 1 | ヒラザガネ16 | WASHER, PLAIN 16 | |
| 70-2-4-2 | S38648001 | 1 | 6カクナットU5/8 | NUT, U5/8-28 | |
| 70-2-4-3 | S01005000 | 1 | イトタテゴム | RUBBER WASHER | |
| 70-2-5 | 150106003 | 1 | コラムジヨイントクミ | COLUMN JOINT ASSY | |
| 70-2-5-1 | 150173003 | 1 | コラムジヨイント | COLUMN JOINT | |
| 70-2-5-2 | 062501406 | 2 | ナベコ5X14 | SCREW, PAN M5X14 | |
| 70-2-5-3 | 021500106 | 2 | 1シユナツト5 | NUT, 1 M5 | |

118-291-910

◎付属品の明細は変更することがあります。
◎The details of included accessories are subject to change.
◎Änderungen in der Aufstellung der Mitgelieferten Zubehöre sind vorbehalten.
◎Les détails des accessoires inclus sont sujets à des changements.
◎Los detalles des accesorios incluídos pueden variar.

From the library of: Superior Sewing Machine & Supply LLC

| REF.NO. | CODE | Q'TY | ヒンメイ | NAME OF PARTS | RM |
|---|---|---|---|---|---|
| 70-2-6 | S13173009 | 2 | ホルダーウケダイクミ | HOLDER SUPPORT BRACKET ASSY | |
| 70-2-6-1 | S13174109 | 2 | ホルダーウケダイ | HOLDER SUPPORT BRACKET | |
| 70-2-6-2 | 014060632 | 2 | アナクボミ6X6 | SET SCREW, SOCKET (CP) M6X6 | |
| 70-2-7 | S13175001 | 6 | ホルダージクSクミ | HOLDER SHAFT ASSY, S | |
| 70-2-7-1 | S13176001 | 6 | ホルダージクS | HOLDER SHAFT, S | |
| 70-2-7-2 | 062502002 | 6 | ナベコ5X20 | SCREW, PAN M5X20 | |
| 70-2-7-3 | 028050242 | 6 | バネザガネ2-5 | WASHER, SPRING 2-5 | |
| 70-2-8 | S02778002 | 1 | スプールホルダー2 | SPOOL HOLDER, 2 | |
| 70-2-9 | S02779009 | 2 | スプールホルダー3 | SPOOL HOLDER, 3 | |
| 70-2-10 | S02780001 | 1 | スプールネジセツト2 | SPOOL SCREW SET, 2 | |
| 70-2-10-1 | 150179002 | 2 | スプールジクB | SPOOL SHAFT, B | |
| 70-2-10-2 | 028050246 | 2 | バネザガネ2-5 | WASHER, SPRING 2-5 | |
| 70-2-10-3 | 021500106 | 4 | 1シユナツト5 | NUT, 1 M5 | |
| 70-2-10-4 | 062503506 | 1 | ナベコM5X35 | SCREW, PAN M5X35 | |
| 70-2-10-5 | 062501406 | 1 | ナベコ5X14 | SCREW, PAN M5X14 | |
| 70-2-10-6 | 026050136 | 2 | ヒラザガネコガタ5 | WASHER, PLAIN S 5 | |
| 70-2-11 | S02782001 | 2 | スプールネジセツト3 | SPOOL & SCREW SET, 3 | |
| 70-2-11-1 | 150179002 | 3 | スプールジクB | SPOOL SHAFT, B | |
| 70-2-11-2 | 028050246 | 3 | バネザガネ2-5 | WASHER, SPRING 2-5 | |
| 70-2-11-3 | 021500106 | 5 | 1シユナツト5 | NUT, 1 M5 | |
| 70-2-11-4 | 062503506 | 1 | ナベコM5X35 | SCREW, PAN M5X35 | |
| 70-2-11-5 | 062501406 | 1 | ナベコ5X14 | SCREW, PAN M5X14 | |
| 70-2-11-6 | 026050136 | 2 | ヒラザガネコガタ5 | WASHER, PLAIN S 5 | |
| 70-2-12 | S51283001 | 8 | ウケザラ | SPOOL STAND BASE | |
| 70-2-13 | 150182000 | 8 | スプールマツト | SPOOL MAT | |
| 70-2-14 | S51282001 | 8 | スプールクツシヨン | SPOOL CUSHION | |
| 70-2-15 | S02784009 | 2 | ホルダーササエAセツト | HOLDER SUPPORT SET, A | |
| 70-2-15-1 | 150188009 | 2 | スプールホルダーササエA | SPOOL HOLDER SUPPORT, A | |
| 70-2-15-2 | 062501006 | 2 | ナベコ5X10 | SCREW, PAN M5X10 | |
| 70-2-15-3 | 021500106 | 2 | 1シユナツト5 | NUT, 1 M5 | |
| 70-2-15-4 | 031452206 | 2 | マルモク45X22 | WOOD SCREW, ROUND M4.5X22 | |
| 70-2-16 | S02786002 | 1 | スレツドハンガークミ2 | THREAD HANGER ASSY, 2 | |
| 70-2-16-1 | S02787002 | 1 | スレツドハンガー2 | THREAD HANGER, 2 | |
| 70-2-16-2 | 150183000 | 2 | イトカケハンガーダイ | THREAD HANGER BASE | |
| 70-2-16-3 | 142990001 | 2 | スレツドブツシユ | THREAD BUSH | |
| 70-2-17 | S02788009 | 1 | スレツドハンガークミ3 | THREAD HANGER ASSY, 3 | |
| 70-2-17-1 | S02789009 | 1 | スレツドハンガー3 | THREAD HANGER, 3 | |
| 70-2-17-2 | 150183000 | 5 | イトカケハンガーダイ | THREAD HANGER BASE | |
| 70-2-17-3 | 142990001 | 3 | スレツドブツシユ | THREAD BUSH | |
| 70-2-18 | S13666009 | 1 | スレツドハンガークミ3-5 | THREAD HANGER ASSY 3-5 | |
| 70-2-18-1 | S02789009 | 1 | スレツドハンガー3 | THREAD HANGER, 3 | |
| 70-2-18-2 | 150183000 | 5 | イトカケハンガーダイ | THREAD HANGER BASE | |
| 70-2-18-3 | 142990001 | 5 | スレツドブツシユ | THREAD BUSH | |
| 70-2-19 | 150145009 | 1 | イトアンナイホルダークミ | THREAD GUIDE HOLDER ASSY | |
| 70-2-19-1 | 150185009 | 1 | イトアンナイホルダー | THREAD GUIDE HOLDER | |
| 70-2-19-2 | 062503506 | 1 | ナベコM5X35 | SCREW, PAN M5X35 | |
| 70-2-19-3 | 021500106 | 1 | 1シユナツト5 | NUT, 1 M5 | |
| 70-2-20 | S04109001 | 1 | イトアンナイササエボウ | SUPPORT BAR, ;TR-GUIDE | |
| 70-2-21 | 138843001 | 1 | ササエボウツギテ | JOINT | |
| 70-2-22 | 014060632 | 2 | アナクボミ6X6 | SET SCREW, SOCKET (CP) M6X6 | |
| 70-2-23 | S13172001 | 1 | イトアンナイ8 | THREAD GUIDE, 8 | |

118-291-910

◎ 付属品の明細は変更することがあります。
◎ The details of included accessories are subject to change.
◎ Änderungen in der Aufstellung der Mitgelieferten Zubehöre sind vorbehalten.
◎ Les détails des accessoires inclus sont sujets à des changements.
◎ Los detalles des accesorios incluídos pueden variar.


From the library of: Superior Sewing Machine & Supply LLC

## Ga . ゲージ部品一覧表 / Gauge parts List / Lehrenliste / Liste des Pièces decartment / Lista d´ePiezas de calibradores

| 仕様<br>Specifications | 060-7 | 060-8 | 060-A |
|---|---|---|---|
| 仕様ラベル<br>Label | S28933-015 | S28933-016 | S28933-017 |
| 用途<br>Application | 厚物腰バンド付<br>For sewing waist bands jeans<br>(for medium-weight to heavy-weight materials) | | |
| 針数(本)<br>No. of Needles | 2 | 2 | 4 |
| 針幅(mm)<br>Needle gauge (mm) | 31.8 | 34.9 | 6.4 - 25.4 - 6.4 |
| 針止メ組<br>Needle clamp assy | 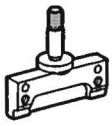<br>S51592-001 | 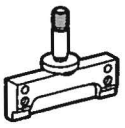<br>S51590-001 | 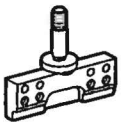<br>S55853-001 |
| 針板<br>Needle plate | 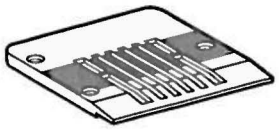<br>S50596-101 | 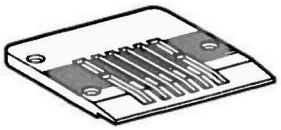<br>S51595-101 | <br>S55855-001 |
| 押工組<br>Presser foot assy | 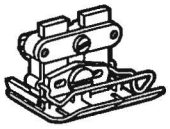<br>S51609-101 | 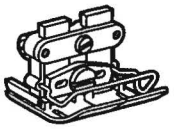<br>S51597-101 | 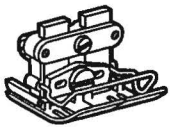<br>S55856-001 |
| 送り歯<br>Feed dog | <br>S51613-201 | <br>S51612-201 | <br>S55859-001 |
| ルーパホルダ<br>Looper holder | 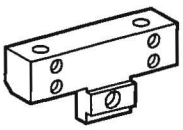<br>S51615-001 | 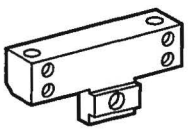<br>S51614-001 | 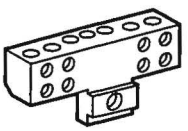<br>S55860-001 |
| ルーパ<br>Looper | <br>S51616-001 | | |
| リテーナ<br>Retainer | <br>S51622-001 | 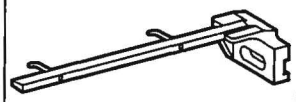<br>S51619-001 | 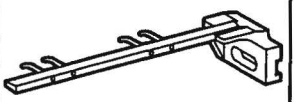<br>S55861-001 |

From the library of: Superior Sewing Machine & Supply LLC

## Wa. 警告ラベル / Warning labels / Warnschilder / Etiquettes d'avertissement / Etiquetas de advertencia

| 警告ラベル / Warning labels | 品名 / Name of parts | Size(mm) | Code |
|---|---|---|---|
|  | 操作注意ラベル・和 | 40×64 | S38350-001 |
|  | Label, operation Eng. | 40×64 | S38349-001 |
| 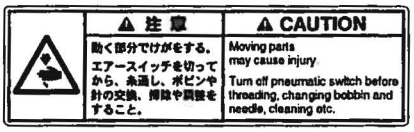 | 操作注意ラベル・エアー<br>Label, caution ;operating | 35×118 | S39085-001 |
|  | ワーニングマーク<br>Mark, injury | L=16 | S36924-001 |
| 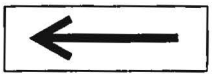 | 矢印マーク<br>Label, arrow | 10×30 | S37058-001 |
|  | アースマーク<br>Label, grounding | $\phi$ 12 | S37060-001 |

118-291-Wa



From the library of: Superior Sewing Machine & Supply LLC

索引 / INDEX / VERZEICHNIS /
INDEX / INDICE


| CODE | REF.NO. | Page |
|---|---|---|
| J80347001 | N - 1 | 28 |
| S00356001 | M - 5 | 28 |
| S00383001 | M - 6 | 28 |
| S01005000 | Z2 - 70-2-4-3 | 38 |
| S01561000 | Q2 - 2-9-24 | 34 |
| S01943001 | Z1 - 6 | 36 |
| S02499009 | A - 5 | 2 |
| S02605000 | A - 6 | 2 |
| S02606000 | A - 14 | 2 |
| S02775001 | Z2 - 70-1-4 | 38 |
| S02778002 | Z2 - 70-1-13 | 38 |
| | Z2 - 70-2-8 | 39 |
| S02779009 | Z2 - 70-2-9 | 39 |
| S02780001 | Z2 - 70-2-10 | 39 |
| S02782001 | Z2 - 70-2-11 | 39 |
| S02784009 | Z2 - 70-2-15 | 39 |
| S02786002 | Z2 - 70-1-14 | 38 |
| | Z2 - 70-2-16 | 39 |
| S02787002 | Z2 -70-2-16-1 | 39 |
| S02788009 | Z2 - 70-2-17 | 39 |
| S02789009 | Z2 -70-2-17-1 | 39 |
| | Z2 -70-2-18-1 | 39 |
| S04109001 | Z2 - 70-1-5 | 38 |
| | Z2 - 70-2-20 | 39 |
| S04905000 | P - 1-7-6-4 | 30 |
| | P - 1-9-2 | 30 |
| | P - 1-9-5 | 30 |
| S04910000 | Q2 - 2-9-28 | 34 |
| S06701000 | Z1 - 23 | 36 |
| S06704001 | Z1 - 45 | 36 |
| S07783001 | Z1 - 10 | 36 |
| S08758109 | D - 1 | 8 |
| S08761100 | D - 3 | 8 |
| S08877001 | C - 13 | 6 |
| S08889101 | H - 1 | 18 |
| S08890001 | H - 1-1 | 18 |
| S08896101 | H - 12 | 18 |
| S08897001 | H - 12-1 | 18 |
| | H - 15-1 | 18 |
| S08935001 | K - 1 | 20 |
| S08945001 | K - 30-1 | 20 |
| S08946000 | K - 30-2 | 20 |
| S08956100 | K - 74 | 22 |
| S08957001 | K - 73 | 22 |
| S08963001 | L2 - 33 | 26 |
| | L2 - 33 | 26 |
| S08969201 | L1 - 7 | 24 |
| S08977001 | L1 - 52 | 24 |
| S08981001 | L1 - 63 | 24 |
| S08993101 | K - 48 | 20 |
| S09001101 | Z1 - 41 | 36 |
| S09002009 | Z1 - 48 | 36 |
| S09021100 | Z1 - 65 | 36 |
| S09120001 | C - 1-5-1 | 6 |
| S10243000 | Q2 - 2-13 | 34 |
| S11440011 | P - 1-15 | 30 |
| S11630001 | P - 1-1-14 | 30 |
| S12726151 | B - 1-1 | 6 |
| S12741000 | M - 9 | 28 |
| S12810109 | Z2 - 70-2 | 38 |
| S12821101 | F - 1-4 | 10 |
| | M - 1-2 | 28 |
| S12825000 | F - 40 | 10 |

| CODE | REF.NO. | Page |
|---|---|---|
| S12825000 | J - 11 | 18 |
| S12826100 | F - 38 | 10 |
| | J - 9 | 18 |
| S12827000 | F - 39 | 10 |
| | J - 10 | 18 |
| S12846001 | K - 25-3 | 20 |
| S12857000 | M - 7 | 28 |
| S12882001 | L1 - 50 | 24 |
| | L1 - 60 | 24 |
| S12915001 | F - 1-3 | 10 |
| S12918000 | F - 22 | 10 |
| S12987001 | K - 70 | 22 |
| S13064001 | P - 1-7 | 30 |
| S13065001 | P - 1-7-6 | 30 |
| S13067001 | Q2 - 2-7 | 34 |
| S13067101 | P - 1-11 | 30 |
| S13068000 | P - 1-11-2 | 30 |
| | P - 1-19 | 30 |
| | Q2 - 2-7-2 | 34 |
| S13172001 | Z2 - 70-2-23 | 39 |
| S13173009 | Z2 - 70-2-6 | 39 |
| S13174109 | Z2 - 70-2-6-1 | 39 |
| S13175001 | Z2 - 70-2-7 | 39 |
| S13176001 | Z2 - 70-2-7-1 | 39 |
| S13385001 | Q2 - 2-5-8 | 34 |
| S13666009 | Z2 - 70-2-18 | 39 |
| S13794001 | Z2 - 70-2-4 | 38 |
| S14145000 | P - 1-9-3 | 30 |
| S14622001 | H - 1-2 | 18 |
| S14623001 | H - 12-2 | 18 |
| S15031002 | P - 1-18 | 30 |
| S20246001 | Z1 - 57 | 36 |
| S20769000 | Z1 - 46 | 36 |
| S20878000 | F - 19 | 10 |
| | F - 36 | 10 |
| | J - 7 | 18 |
| S21356001 | Q1 - 1-7-1 | 32 |
| | Q2 - 2-9-1 | 34 |
| S21357001 | Q1 - 1-7-2 | 32 |
| | Q2 - 2-9-2 | 34 |
| S21358001 | Q1 - 1-7-4 | 32 |
| | Q2 - 2-9-4 | 34 |
| S21359001 | Q1 - 1-7-7 | 32 |
| | Q2 - 2-9-7 | 34 |
| S21360001 | Q1 - 1-7-8 | 32 |
| | Q2 - 2-9-8 | 34 |
| S21361001 | Q1 - 1-7-9 | 32 |
| | Q2 - 2-9-9 | 34 |
| S21362000 | Q1 - 1-7-10 | 32 |
| | Q2 - 2-9-10 | 34 |
| S21716001 | P - 1-5 | 30 |
| S21754001 | M - 10 | 28 |
| S21798001 | Z2 - 70-1-10 | 38 |
| S23342001 | J - 1-2-2 | 18 |
| S23647000 | Q1 - 1-1-2 | 32 |
| | Q2 - 2-1-2 | 34 |
| S23660000 | Q2 - 2-5-9 | 34 |
| S23806001 | Z1 - 8 | 36 |
| S24320001 | Q1 - 1-7 | 32 |
| S24322001 | Q1 - 1-7-17 | 32 |
| | Q2 - 2-9-17 | 34 |
| S24323000 | Q1 - 1-7-21 | 32 |
| | Q2 - 2-9-21 | 34 |

| CODE | REF.NO. | Page |
|---|---|---|
| S24324001 | Q1 - 1-7-18 | 32 |
| | Q2 - 2-9-18 | 34 |
| S24325001 | Q1 - 1-7-19 | 32 |
| | Q2 - 2-9-19 | 34 |
| S24493001 | Q1 - 1-5 | 32 |
| S24494000 | Q1 - 1-5-2 | 32 |
| S25234001 | B - 1-3 | 6 |
| S25818051 | L1 - 14 | 24 |
| S28031001 | A - 29 | 2 |
| S28032001 | A - 31 | 2 |
| S28033000 | A - 36 | 2 |
| S28034101 | A - 38 | 2 |
| | A - 49 | 2 |
| S28035001 | A - 40 | 2 |
| | A - 51 | 2 |
| S28043001 | A - 65 | 2 |
| S28044001 | A - 67 | 2 |
| S28045000 | A - 81 | 4 |
| S28046000 | A - 82 | 4 |
| S28075001 | A - 26 | 2 |
| | L1 - 61 | 24 |
| S28193001 | F - 41 | 10 |
| | J - 12 | 18 |
| | J - 16 | 18 |
| S28398001 | K - 3-4 | 20 |
| S28403001 | K - 27 | 20 |
| S28441001 | Z1 - 35 | 36 |
| S28442001 | Z1 - 36 | 36 |
| S28444001 | Z1 - 50 | 36 |
| S28933015 | Ga - 90-1 | 40 |
| S28933016 | Ga - 90-2 | 40 |
| S28933017 | Ga - 90-3 | 40 |
| S29854209 | Z2 - 70-1 | 38 |
| S30564000 | L2 - 1-1-9 | 26 |
| | L2 - 1-2-9 | 26 |
| | L2 - 40 | 26 |
| | L2 - 40 | 26 |
| S30565001 | L2 - 1-2-12 | 26 |
| | L2 - 43 | 26 |
| S30565002 | L2 - 1-1-10 | 26 |
| | L2 - 1-2-10 | 26 |
| | L2 - 41 | 26 |
| | L2 - 41 | 26 |
| S30565003 | L2 - 1-1-13 | 26 |
| | L2 - 1-2-13 | 26 |
| | L2 - 44 | 26 |
| | L2 - 44 | 26 |
| S30565004 | L2 - 1-2-11 | 26 |
| | L2 - 42 | 26 |
| S30570001 | C - 1-1 | 6 |
| S31013001 | E - 9 | 8 |
| S31704000 | P - 1-16 | 30 |
| | Q2 - 2-12 | 34 |
| S32521001 | H - 17 | 18 |
| S35219001 | Q1 - 1-1-5 | 32 |
| | Q2 - 2-1-5 | 34 |
| S35305001 | Q1 - 1-2 | 32 |
| | Q2 - 2-2 | 34 |
| S36924001 | P - 1-1-16 | 30 |
| | Wa | 41 |
| S37058001 | Wa | 41 |
| S37060001 | Wa | 41 |
| S38241051 | H - 8 | 18 |


From the library of: Superior Sewing Machine & Supply LLC

| CODE | REF.NO. | Page |
|---|---|---|
| S38245051 | B - 8 | 6 |
| S38349001 | Wa | 41 |
| S38350001 | Wa | 41 |
| S38648001 | Z2 - 70-1-4-2 | 38 |
| | Z2 - 70-2-4-2 | 38 |
| S38707001 | B - 1-2 | 6 |
| S38737001 | L2 - 1-1-2 | 26 |
| | L2 - 1-2-2 | 26 |
| S39085001 | P - 1-24 | 30 |
| | Wa | 41 |
| S39086001 | P - 1-1-15 | 30 |
| S39569001 | J - 1-2-1 | 18 |
| S39757001 | L1 - 64 | 24 |
| S40640001 | Z2 - 70-1-7 | 38 |
| S40641001 | Z2 - 70-1-15 | 38 |
| S40642001 | Z2 - 70-1-16 | 38 |
| S40643001 | Z2 - 70-1-17 | 38 |
| S42426001 | C - 15 | 6 |
| S44010101 | A - 68 | 4 |
| S45688000 | P - 1-1-2 | 30 |
| S51282001 | Z2 - 70-1-3 | 38 |
| | Z2 - 70-2-14 | 39 |
| S51283001 | Z2 - 70-1-1 | 38 |
| | Z2 - 70-2-12 | 39 |
| S51503001 | A - 2 | 2 |
| S51504000 | A - 3 | 2 |
| S51505001 | A - 8 | 2 |
| S51506000 | A - 9 | 2 |
| S51507001 | A - 11 | 2 |
| S51508000 | A - 12 | 2 |
| S51509101 | A - 21 | 2 |
| S51510100 | A - 22 | 2 |
| S51511101 | A - 24 | 2 |
| S51512001 | A - 28 | 2 |
| S51513101 | A - 43 | 2 |
| S51514001 | A - 44 | 2 |
| S51515000 | A - 46 | 2 |
| S51517001 | A - 53 | 2 |
| S51518100 | A - 54 | 2 |
| S51519001 | A - 56-1 | 2 |
| S51520001 | A - 58 | 2 |
| S51521000 | A - 59 | 2 |
| S51523001 | A - 56 | 2 |
| S51524000 | A - 56-2 | 2 |
| | P - 1-6-1 | 30 |
| S51525001 | A - 61 | 2 |
| S51530101 | B - 1 | 6 |
| S51531001 | B - 2 | 6 |
| S51532001 | B - 6 | 6 |
| S51533001 | B - 6-1 | 6 |
| S51534101 | B - 10 | 6 |
| S51535101 | B - 10-1 | 6 |
| S51536101 | C - 1 | 6 |
| S51537001 | C - 1-3 | 6 |
| S51538001 | C - 1-4 | 6 |
| S51540001 | C - 1-5 | 6 |
| S51543001 | C - 2 | 6 |
| S51544001 | C - 3 | 6 |
| S51545001 | C - 4 | 6 |
| S51546001 | C - 8 | 6 |
| S51547001 | C - 10 | 6 |
| S51548001 | C - 12 | 6 |
| S51550001 | E - 2 | 8 |

| CODE | REF.NO. | Page |
|---|---|---|
| S51551001 | E - 3 | 8 |
| S51552001 | E - 4 | 8 |
| S51553001 | E - 6 | 8 |
| S51554001 | E - 8 | 8 |
| S51555001 | E - 10 | 8 |
| S51556001 | E - 12 | 8 |
| S51557001 | E - 14 | 8 |
| S51558001 | E - 16 | 8 |
| S51560101 | F - 1 | 10 |
| S51561101 | F - 1-1 | 10 |
| S51563001 | F - 1-1-1 | 10 |
| S51564101 | F - 1-1-2 | 10 |
| S51565101 | F - 1-1-3 | 10 |
| S51566001 | F - 1-1-4 | 10 |
| S51568000 | F - 1-1-7 | 10 |
| S51569001 | F - 1-2 | 10 |
| S51570001 | F - 2 | 10 |
| | F - 61 | 12 |
| S51571001 | F - 4 | 10 |
| S51572001 | F - 6 | 10 |
| S51573001 | F - 8 | 10 |
| S51574101 | F - 15 | 10 |
| S51575001 | F - 20 | 10 |
| S51576000 | F - 23 | 10 |
| S51577001 | F - 30 | 10 |
| S51579001 | F - 32 | 10 |
| | J - 3 | 18 |
| S51580000 | F - 35 | 10 |
| | J - 6 | 18 |
| S51581001 | F - 50 | 10 |
| S51582001 | F - 53 | 10 |
| S51583001 | F - 54 | 10 |
| S51584001 | F - 55 | 10 |
| S51585001 | F - 60 | 12 |
| S51587001 | F - 62 | 12 |
| S51590001 | Ga - 1-1 | 40 |
| | G1 - 1-1 | 14 |
| S51592001 | Ga - 1-2 | 40 |
| | G1 - 1-2 | 14 |
| S51594019 | G2 - 2 | 16 |
| | G2 - 2 | 16 |
| S51594022 | G2 - 2 | 16 |
| | G2 - 2 | 16 |
| | Z1 - 1-1 | 36 |
| S51594422 | Z1 - 1 | 36 |
| S51595101 | Ga - 3-1 | 40 |
| | G1 - 3-1 | 14 |
| S51596101 | Ga - 3-2 | 40 |
| | G1 - 3-2 | 14 |
| S51597201 | Ga - 10-1 | 40 |
| | G1 - 10-1 | 14 |
| S51598001 | G1 - 10-1-1 | 14 |
| | G1 - 10-2-1 | 14 |
| | G1 - 10-3-1 | 14 |
| S51603001 | G1 - 10-1-2 | 14 |
| | G1 - 10-2-2 | 14 |
| | G1 - 10-3-2 | 14 |
| S51605001 | G1 - 10-1-3 | 14 |
| | G1 - 10-2-3 | 14 |
| | G1 - 10-3-3 | 14 |
| S51606001 | G1 - 10-1-6 | 14 |
| | G1 - 10-2-6 | 14 |
| | G1 - 10-3-6 | 14 |

| CODE | REF.NO. | Page |
|---|---|---|
| S51607001 | G1 - 10-1-7 | 14 |
| | G1 - 10-2-7 | 14 |
| | G1 - 10-3-7 | 14 |
| S51608101 | G1 - 10-1-8 | 14 |
| | G1 - 10-2-8 | 14 |
| | G1 - 10-3-8 | 14 |
| S51609201 | Ga - 10-2 | 40 |
| | G1 - 10-2 | 14 |
| S51612201 | Ga - 11-1 | 40 |
| | G1 - 11-1 | 14 |
| S51613201 | Ga - 11-2 | 40 |
| | G1 - 11-2 | 14 |
| S51614001 | Ga - 13-1 | 40 |
| | G1 - 13-1 | 14 |
| S51615001 | Ga - 13-2 | 40 |
| | G1 - 13-2 | 14 |
| S51616001 | Ga - 16 | 40 |
| | G2 - 16 | 16 |
| | G2 - 16 | 16 |
| S51617001 | G2 - 16-1 | 16 |
| | G2 - 16-1 | 16 |
| S51618001 | G2 - 16-2 | 16 |
| | G2 - 16-2 | 16 |
| S51619001 | Ga - 20-1 | 40 |
| | G1 - 20-1 | 14 |
| S51622001 | Ga - 20-2 | 40 |
| | G1 - 20-2 | 14 |
| S51625001 | G1 - 10-1-5 | 14 |
| | G1 - 10-2-5 | 14 |
| | G1 - 10-3-5 | 14 |
| S51626001 | G1 - 10-1-4 | 14 |
| | G1 - 10-2-4 | 14 |
| | G1 - 10-3-4 | 14 |
| S51627001 | G1 - 10-1-9 | 14 |
| | G1 - 10-2-9 | 14 |
| | G1 - 10-3-9 | 14 |
| S51630001 | H - 5 | 18 |
| S51631000 | H - 10 | 18 |
| S51632001 | H - 15 | 18 |
| S51633001 | J - 1 | 18 |
| S51642001 | J - 14 | 18 |
| S51645001 | K - 3 | 20 |
| S51646000 | K - 3-6 | 20 |
| S51647000 | K - 3-12 | 20 |
| S51648100 | K - 10 | 20 |
| S51651000 | K - 13 | 20 |
| S51652000 | K - 14 | 20 |
| S51653001 | K - 20 | 20 |
| S51655101 | K - 25 | 20 |
| S51656001 | K - 25-1 | 20 |
| S51657001 | K - 25-2 | 20 |
| S51660001 | K - 30 | 20 |
| S51661000 | K - 30-3 | 20 |
| S51662000 | K - 30-4 | 20 |
| S51663000 | K - 34 | 20 |
| S51664000 | K - 35 | 20 |
| S51665000 | K - 36 | 20 |
| S51666100 | K - 37 | 20 |
| S51667000 | F - 18 | 10 |
| S51668000 | K - 40 | 20 |
| S51669000 | K - 45 | 20 |
| S51672001 | K - 55 | 22 |
| S51676001 | K - 59 | 22 |



From the library of: Superior Sewing Machine & Supply LLC

| CODE | REF.NO. | Page |
|---|---|---|
| S51678000 | K - 63 | 22 |
| | K - 68 | 22 |
| S51679000 | K - 64 | 22 |
| S51680000 | K - 65 | 22 |
| S51681000 | K - 66 | 22 |
| S51682000 | K - 67 | 22 |
| S51683001 | K - 11 | 20 |
| S51684001 | K - 23 | 20 |
| S51685001 | L2 - 1-1 | 26 |
| S51686001 | L2 - 1-2 | 26 |
| S51687001 | L2 - 1-1-1 | 26 |
| | L2 - 1-2-1 | 26 |
| S51688001 | L2 - 1-1-15 | 26 |
| | L2 - 1-2-15 | 26 |
| S51689001 | L1 - 11 | 24 |
| S51690001 | L1 - 13 | 24 |
| S51691001 | L1 - 16 | 24 |
| S51692001 | L1 - 18 | 24 |
| S51693001 | L1 - 55 | 24 |
| S51694001 | L1 - 58 | 24 |
| S51695001 | M - 1 | 28 |
| S51700001 | M - 2 | 28 |
| S51701101 | M - 4 | 28 |
| S51702000 | M - 8 | 28 |
| S51703001 | M - 11 | 28 |
| S51704001 | M - 12 | 28 |
| S51705101 | M - 13 | 28 |
| S51706001 | M - 15 | 28 |
| S51707000 | M - 16 | 28 |
| S51708000 | M - 17 | 28 |
| S51709001 | M - 18 | 28 |
| S51711001 | N - 3 | 28 |
| | Z1 - 58 | 36 |
| S51712001 | Z1 - 18 | 36 |
| S51713001 | Z1 - 53 | 36 |
| S51714001 | Z1 - 60 | 36 |
| S51721001 | Q1 - 1 | 32 |
| S51722001 | Q1 - 1-1 | 32 |
| | Q2 - 2-1 | 34 |
| S51723000 | Q1 - 1-1-1 | 32 |
| | Q2 - 2-1-1 | 34 |
| S51724001 | Q1 - 1-1-3 | 32 |
| | Q2 - 2-1-3 | 34 |
| S51725001 | Q1 - 1-1-4 | 32 |
| | Q2 - 2-1-4 | 34 |
| S51726100 | Q1 - 1-8 | 32 |
| | Q2 - 2-10 | 34 |
| S51727000 | Q1 - 1-9 | 32 |
| | Q2 - 2-11 | 34 |
| S51730001 | E - 7 | 8 |
| S51735001 | Q2 - 2 | 34 |
| S51736001 | Q2 - 2-5 | 34 |
| S51737001 | Q2 - 2-5-1 | 34 |
| S51738001 | Q2 - 2-5-3 | 34 |
| S51739001 | Q2 - 2-5-5 | 34 |
| S51740001 | Q2 - 2-5-7 | 34 |
| S51741001 | Q2 - 2-9 | 34 |
| S51748001 | P - 1 | 30 |
| S51749001 | P - 1-1 | 30 |
| S51750000 | P - 1-1-1 | 30 |
| S51751101 | P - 1-1-3 | 30 |
| S51752001 | P - 1-1-4 | 30 |
| S51753001 | P - 1-1-5 | 30 |

| CODE | REF.NO. | Page |
|---|---|---|
| S51754001 | P - 1-1-8 | 30 |
| S51755001 | P - 1-1-11 | 30 |
| S51756101 | P - 1-3 | 30 |
| S51757001 | P - 1-4 | 30 |
| S51758101 | P - 1-6 | 30 |
| S51760001 | P - 1-9 | 30 |
| S51761000 | P - 1-13 | 30 |
| S51762000 | P - 1-17 | 30 |
| S55666002 | Z1 - 24 | 36 |
| S55853001 | Ga - 1-3 | 40 |
| | G1 - 1-3 | 14 |
| S55855001 | Ga - 3-3 | 40 |
| | G1 - 3-3 | 14 |
| S55856001 | Ga - 10-3 | 40 |
| | G1 - 10-3 | 14 |
| S55859001 | Ga - 11-3 | 40 |
| | G1 - 11-3 | 14 |
| S55860001 | Ga - 13-3 | 40 |
| | G1 - 13-3 | 14 |
| S55861001 | Ga - 20-3 | 40 |
| | G1 - 20-3 | 14 |
| 002301615 | Q1 - 1-7-23 | 32 |
| | Q2 - 2-9-23 | 34 |
| 007402516 | Q2 - 2-9-25 | 34 |
| 012400532 | Q1 - 1-7-20 | 32 |
| | Q2 - 2-9-20 | 34 |
| 012500532 | M - 14 | 28 |
| 014060632 | Z2 -70-1-17-1 | 38 |
| | Z2 - 70-2-6-2 | 39 |
| | Z2 - 70-2-22 | 39 |
| 014300332 | G2 - 16-3 | 16 |
| | G2 - 16-3 | 16 |
| 014680432 | L1 - 32 | 24 |
| | L1 - 32 | 24 |
| 014760632 | F - 52 | 10 |
| | F - 63 | 12 |
| 014761030 | B - 11 | 6 |
| | F - 1-1-12 | 10 |
| 014770632 | B - 4 | 6 |
| | B - 7 | 6 |
| | F - 25 | 10 |
| | F - 30-1 | 10 |
| | H - 13 | 18 |
| | H - 16 | 18 |
| | J - 1-1 | 18 |
| | K - 2 | 20 |
| | M - 1-1 | 28 |
| 014771032 | B - 9 | 6 |
| | H - 9 | 18 |
| 014780632 | C - 9 | 6 |
| | H - 2 | 18 |
| 017771412 | M - 3 | 28 |
| 018060832 | K - 26 | 20 |
| 018061236 | P - 1-2 | 30 |
| 018061632 | K - 4 | 20 |
| 018081632 | A - 83 | 4 |
| 018301222 | G2 - 16-4 | 16 |
| | G2 - 16-4 | 16 |
| 018401632 | Q1 - 1-4 | 32 |
| | Q2 - 2-4 | 34 |
| 018501032 | P - 1-1-9 | 30 |
| 018501432 | G2 - 14 | 16 |
| 018502222 | Z1 - 56 | 36 |

| CODE | REF.NO. | Page |
|---|---|---|
| 018680832 | A - 13 | 2 |
| | E - 13 | 8 |
| | P - 1-1-12 | 30 |
| | G2 - 21 | 16 |
| | L1 - 8 | 24 |
| 018681032 | A - 25 | 2 |
| 018771432 | C - 11 | 6 |
| | F - 31 | 10 |
| | F - 51 | 10 |
| | F - 62-1 | 12 |
| | H - 7 | 18 |
| | J - 15 | 18 |
| | L1 - 53 | 24 |
| 018771632 | F - 5 | 10 |
| | J - 2 | 18 |
| 021060106 | Z1 - 39 | 36 |
| 021060302 | Q1 - 1-7-6 | 32 |
| | Q1 - 1-7-15 | 32 |
| | Q2 - 2-9-6 | 34 |
| | Q2 - 2-9-15 | 34 |
| 021400106 | Q2 - 2-9-27 | 34 |
| | Z1 - 31 | 36 |
| 021400202 | Q1 - 1-7-3 | 32 |
| | Q2 - 2-9-3 | 34 |
| 021500106 | Z2 -70-1-10-3 | 38 |
| | Z2 -70-1-15-1 | 38 |
| | Z2 -70-1-16-1 | 38 |
| | Z2 -70-1-17-2 | 38 |
| | Z2 - 70-2-5-3 | 38 |
| | Z2 -70-2-10-3 | 39 |
| | Z2 -70-2-11-3 | 39 |
| | Z2 -70-2-15-3 | 39 |
| | Z2 -70-2-19-3 | 39 |
| 021660102 | F - 59 | 12 |
| 025040236 | Q1 - 1-7-12 | 32 |
| | Q2 - 2-9-12 | 34 |
| | Q2 - 2-9-26 | 34 |
| 025050132 | A - 33 | 2 |
| 025060236 | Z1 - 37 | 36 |
| 025350332 | K - 3-2 | 20 |
| | K - 3-14 | 20 |
| 025750132 | Z1 - 52 | 36 |
| | Z1 - 55 | 36 |
| 026050136 | Z2 -70-1-15-5 | 38 |
| | Z2 -70-1-16-4 | 38 |
| | Z2 -70-2-10-6 | 39 |
| | Z2 -70-2-11-6 | 39 |
| 028050242 | Z2 - 70-2-7-3 | 39 |
| 028050246 | Z2 -70-1-10-2 | 38 |
| | Z2 -70-2-10-2 | 39 |
| | Z2 -70-2-11-2 | 39 |
| 028060242 | Z1 - 38 | 36 |
| 031311302 | P - 1-23 | 30 |
| 031411304 | P - 1-14 | 30 |
| 031452206 | Z2 -70-2-15-4 | 39 |
| 032461606 | Z1 - 42 | 36 |
| 034422503 | P - 1-8 | 30 |
| 048030342 | Q1 - 1-3 | 32 |
| | Q2 - 2-3 | 34 |
| 048040342 | A - 32 | 2 |
| | F - 7 | 10 |
| 048060342 | P - 1-7-6-3 | 30 |
| 048080142 | Q1 - 1-1-6 | 32 |

From the library of: Superior Sewing Machine & Supply LLC

| CODE | REF.NO. | Page |
|---|---|---|
| 048080142 | Q2 - 2-1-6 | 34 |
| 048110142 | F - 34 | 10 |
| | J - 5 | 18 |
| 048120142 | F - 17 | 10 |
| 060400612 | Q1 - 1-7-11 | 32 |
| | Q2 - 2-9-11 | 34 |
| 060670812 | A - 27 | 2 |
| 060680712 | L1 - 59 | 24 |
| 060681212 | A - 23 | 2 |
| 062350612 | L1 - 15 | 24 |
| 062401406 | Z1 - 32 | 36 |
| 062501006 | Z2 -70-2-15-2 | 39 |
| 062501406 | Z2 -70-1-15-2 | 38 |
| | Z2 -70-1-15-4 | 38 |
| | Z2 -70-1-16-2 | 38 |
| | Z2 - 70-2-5-2 | 38 |
| | Z2 -70-2-10-5 | 39 |
| | Z2 -70-2-11-5 | 39 |
| 062502002 | Z2 - 70-2-7-2 | 39 |
| 062503506 | Z2 -70-1-15-3 | 38 |
| | Z2 -70-1-16-3 | 38 |
| | Z2 -70-1-17-3 | 38 |
| | Z2 -70-2-10-4 | 39 |
| | Z2 -70-2-11-4 | 39 |
| | Z2 -70-2-19-2 | 39 |
| 062630612 | F - 1-5 | 10 |
| | M - 1-3 | 28 |
| 062660712 | F - 1-1-6 | 10 |
| 062670415 | K - 3-13 | 20 |
| 062670512 | A - 62 | 2 |
| 062670612 | K - 47 | 20 |
| | K - 49 | 20 |
| | K - 56 | 22 |
| 062670812 | C - 1-4-1 | 6 |
| | K - 3-3 | 20 |
| | K - 3-8 | 20 |
| 062672012 | L1 - 65 | 24 |
| 062680612 | H - 4 | 18 |
| | K - 12 | 20 |
| | K - 15 | 20 |
| | L1 - 51 | 24 |
| 062680712 | G2 - 12 | 16 |
| | L1 - 12 | 24 |
| 062680812 | A - 10 | 2 |
| | A - 60 | 2 |
| | K - 71 | 22 |
| | L1 - 62 | 24 |
| | Z1 - 61 | 36 |
| 062681012 | A - 4 | 2 |
| | A - 7 | 2 |
| | E - 5 | 8 |
| | L1 - 56 | 24 |
| | Q2 - 2-6 | 34 |
| | Q2 - 2-14 | 34 |
| 062681212 | P - 1-21 | 30 |
| | Q2 - 2-15 | 34 |
| 062710612 | A - 39 | 2 |
| | A - 50 | 2 |
| 062761012 | F - 56 | 10 |
| 062780812 | K - 24 | 20 |
| 062782512 | L1 - 2 | 24 |
| 076004000 | H - 15-2 | 18 |
| 076023800 | B - 6-2 | 6 |

| CODE | REF.NO. | Page |
|---|---|---|
| 081003070 | Q2 - 2-5-2 | 34 |
| 081003670 | F - 10 | 10 |
| 081005670 | P - 1-1-7 | 30 |
| 081012070 | K - 62 | 22 |
| 081014670 | A - 15 | 2 |
| 081044070 | K - 72 | 22 |
| 087311215 | D - 2 | 8 |
| 100032004 | G2 - 4 | 16 |
| 100242003 | Q2 - 2-5-4 | 34 |
| 100251001 | F - 3 | 10 |
| 100366002 | M - 19 | 28 |
| | G2 - 17 | 16 |
| | G2 - 17 | 16 |
| | L1 - 17 | 24 |
| 100463001 | P - 1-7-3 | 30 |
| 100645003 | P - 1-1-13 | 30 |
| | G2 - 22 | 16 |
| | L1 - 9 | 24 |
| | L1 - 57 | 24 |
| 100666002 | Z1 - 51 | 36 |
| | Z1 - 54 | 36 |
| 101118001 | P - 1-10 | 30 |
| | P - 1-12 | 30 |
| | Q1 - 1-6 | 32 |
| | Q2 - 2-8 | 34 |
| 101479101 | F - 1-1-8 | 10 |
| 101572101 | Z1 - 5 | 36 |
| 102424004 | A - 30 | 2 |
| | Z1 - 49 | 36 |
| 102731004 | C - 1-2 | 6 |
| 103602002 | F - 1-1-9 | 10 |
| 103978002 | F - 58 | 12 |
| 104449001 | A - 71 | 4 |
| | A - 74 | 4 |
| | A - 76 | 4 |
| 104450101 | A - 72 | 4 |
| 104464001 | B - 3 | 6 |
| 104830101 | A - 80 | 4 |
| 105106001 | E - 17 | 8 |
| 105161004 | K - 50 | 22 |
| 105231000 | L2 - 1-1-14 | 26 |
| | L2 - 1-2-14 | 26 |
| 105233002 | L2 - 1-1-16 | 26 |
| | L2 - 1-2-16 | 26 |
| 105234003 | L2 - 1-1-17 | 26 |
| | L2 - 1-2-17 | 26 |
| 105235251 | L1 - 3 | 24 |
| 105236001 | L1 - 5 | 24 |
| 105237002 | L1 - 6 | 24 |
| 105333001 | Z1 - 34 | 36 |
| 105335001 | Z1 - 34-1 | 36 |
| 106629002 | A - 45 | 2 |
| | A - 55 | 2 |
| | A - 57 | 2 |
| | L1 - 19 | 24 |
| 107272002 | C - 14 | 6 |
| 107779001 | Z1 - 19 | 36 |
| 108805001 | K - 38 | 20 |
| 109203001 | A - 85 | 4 |
| 110087001 | P - 1-7-5 | 30 |
| 110641002 | A - 84 | 4 |
| 110813001 | L2 - 34 | 26 |
| | L2 - 34 | 26 |

| CODE | REF.NO. | Page |
|---|---|---|
| 110832009 | L2 - 1-1-4 | 26 |
| | L2 - 1-2-4 | 26 |
| | L2 - 36 | 26 |
| | L2 - 36 | 26 |
| 112351001 | K - 21 | 20 |
| 112359052 | K - 25-4 | 20 |
| | K - 28 | 20 |
| | K - 60 | 22 |
| 112364001 | K - 57 | 22 |
| 112467002 | K - 3-11 | 20 |
| 112596101 | C - 7 | 6 |
| 112684001 | H - 14 | 18 |
| 112719001 | K - 32 | 20 |
| 112720101 | K - 33 | 20 |
| 112743001 | K - 46 | 20 |
| 113431002 | P - 1-1-10 | 30 |
| 114967001 | P - 1-7-4 | 30 |
| 115007001 | F - 16 | 10 |
| 115076001 | Q1 - 1-7-22 | 32 |
| | Q2 - 2-9-22 | 34 |
| 115559002 | P - 1-1-6 | 30 |
| 116016001 | Z1 - 33 | 36 |
| 116725001 | A - 66 | 2 |
| 117466000 | Z1 - 22 | 36 |
| 117671002 | F - 24 | 10 |
| 117936001 | A - 73 | 4 |
| 118735002 | C - 6 | 6 |
| | F - 57 | 12 |
| 118837001 | Z1 - 3 | 36 |
| 119712001 | Q1 - 1-7-16 | 32 |
| | Q2 - 2-9-16 | 34 |
| 120370001 | P - 1-22 | 30 |
| 138843001 | Z2 - 70-1-12 | 38 |
| | Z2 - 70-2-21 | 39 |
| 140063001 | E - 11 | 8 |
| 140678000 | P - 1-11-1 | 30 |
| | Q1 - 1-5-1 | 32 |
| | Q2 - 2-7-1 | 34 |
| 142002001 | Z1 - 11 | 36 |
| 142027001 | P - 1-7-2 | 30 |
| 142032001 | P - 1-7-6-2 | 30 |
| 142120001 | F - 1-1-10 | 10 |
| 142274101 | A - 37 | 2 |
| | A - 52 | 2 |
| 142359001 | K - 5 | 20 |
| 142369001 | F - 1-1-11 | 10 |
| 142628001 | F - 33 | 10 |
| | J - 4 | 18 |
| 142721001 | Z1 - 12 | 36 |
| 142990001 | Z2 -70-2-16-3 | 39 |
| | Z2 -70-2-17-3 | 39 |
| | Z2 -70-2-18-3 | 39 |
| 142998101 | Z2 - 70-1-6 | 38 |
| 143602001 | L1 - 10 | 24 |
| 144103009 | L2 - 1-1-7 | 26 |
| | L2 - 1-2-7 | 26 |
| | L2 - 38 | 26 |
| | L2 - 38 | 26 |
| 144110001 | L2 - 39 | 26 |
| | L2 - 39 | 26 |
| 144224001 | Z1 - 47 | 36 |
| 144619000 | K - 3-1 | 20 |
| 144622001 | K - 3-5 | 20 |



From the library of: Superior Sewing Machine & Supply LLC

| CODE | REF.NO. | Page |
|---|---|---|
| 144875001 | K - 3-9 | 20 |
| 144876001 | K - 3-10 | 20 |
| 145440001 | L2 - 1-1-3 | 26 |
| | L2 - 1-2-3 | 26 |
| 145446001 | L2 - 1-1-5 | 26 |
| | L2 - 1-2-5 | 26 |
| | L2 - 37 | 26 |
| | L2 - 37 | 26 |
| 145465001 | C - 1-5-2 | 6 |
| | J - 1-4 | 18 |
| 145472001 | E - 1 | 8 |
| 146354001 | G2 - 15 | 16 |
| 146403001 | F - 1-1-5 | 10 |
| 146427001 | G1 - 1-1-1 | 14 |
| | G1 - 1-2-1 | 14 |
| | G1 - 1-3-1 | 14 |
| | Q2 - 2-5-6 | 34 |
| 146598001 | A - 34 | 2 |
| 146695001 | Q1 - 1-7-5 | 32 |
| | Q1 - 1-7-14 | 32 |
| | Q2 - 2-9-5 | 34 |
| | Q2 - 2-9-14 | 34 |
| 147418000 | P - 1-7-6-5 | 30 |
| 147419001 | P - 1-9-1 | 30 |
| 147420001 | P - 1-9-4 | 30 |
| 147421001 | P - 1-9-6 | 30 |
| 147432001 | P - 1-7-6-1 | 30 |
| 147527000 | K - 3-7 | 20 |
| 147774001 | P - 1-7-1 | 30 |
| 147777000 | J - 1-3 | 18 |
| 147893009 | Z1 - 30 | 36 |
| 147919052 | Z1 - 40 | 36 |
| 148084001 | A - 20 | 2 |
| 148121000 | F - 21 | 10 |
| 148394000 | K - 39 | 20 |
| 148851001 | L2 - 1-1-8 | 26 |
| | L2 - 1-2-8 | 26 |
| 148857001 | F - 42 | 10 |
| | J - 13 | 18 |
| | J - 17 | 18 |
| 149127001 | E - 15 | 8 |
| 149569001 | C - 5 | 6 |
| 150106003 | Z2 - 70-2-5 | 38 |
| 150145009 | Z2 - 70-2-19 | 39 |
| 150172003 | Z2 - 70-2-2 | 38 |
| 150173003 | Z2 - 70-1-9 | 38 |
| | Z2 - 70-2-5-1 | 38 |
| 150174000 | Z2 - 70-1-7-1 | 38 |
| | Z2 - 70-2-3 | 38 |
| 150179002 | Z2 -70-1-10-1 | 38 |
| | Z2 -70-2-10-1 | 39 |
| | Z2 -70-2-11-1 | 39 |
| 150182000 | Z2 - 70-1-2 | 38 |
| | Z2 - 70-2-13 | 39 |
| 150183000 | Z2 -70-2-16-2 | 39 |
| | Z2 -70-2-17-2 | 39 |
| | Z2 -70-2-18-2 | 39 |
| 150185009 | Z2 - 70-1-11 | 38 |
| | Z2 -70-2-19-1 | 39 |
| 150188009 | Z2 -70-2-15-1 | 39 |
| 150206000 | Z2 - 70-2-4-1 | 38 |
| 150206002 | Z2 - 70-1-4-1 | 38 |
| 150335001 | Z1 - 14 | 36 |

| CODE | REF.NO. | Page |
|---|---|---|
| 150644009 | L1 - 30 | 24 |
| | L1 - 30 | 24 |
| 150645009 | L1 - 31 | 24 |
| | L1 - 31 | 24 |
| 151267001 | G2 - 5 | 16 |
| 151602002 | N - 4 | 28 |
| | L1 - 4 | 24 |
| | Z1 - 59 | 36 |
| 151603002 | A - 35 | 2 |
| | A - 47 | 2 |
| | K - 31 | 20 |
| 152718001 | B - 5 | 6 |
| | M - 10-1 | 28 |
| 153484001 | F - 9 | 10 |
| 153734001 | H - 3 | 18 |
| 154179001 | Z1 - 13 | 36 |
| 154886001 | H - 6 | 18 |
| 155162001 | L1 - 54 | 24 |
| 155559001 | Q2 - 2-9-29 | 34 |
| 156112003 | Z2 - 70-1-8 | 38 |
| | Z2 - 70-2-1 | 38 |
| 156887001 | A - 69 | 4 |
| 158115001 | B - 10-2 | 6 |
| 158718000 | F - 37 | 10 |
| | J - 8 | 18 |
| 159150000 | A - 70 | 4 |
| | A - 75 | 4 |
| 159476000 | K - 22 | 20 |
| | K - 29 | 20 |
| | K - 58 | 22 |
| | K - 61 | 22 |
| 159574101 | L2 - 35 | 26 |
| | L2 - 35 | 26 |
| 159805001 | L2 - 1-1-6 | 26 |
| | L2 - 1-2-6 | 26 |
| 181225001 | Q1 - 1-7-13 | 32 |
| | Q2 - 2-9-13 | 34 |
| 224485000 | H - 11 | 18 |
| 403388002 | C - 16 | 6 |
| 525567000 | P - 1-20 | 30 |

From the library of: Superior Sewing Machine & Supply LLC

From the library of: Superior Sewing Machine & Supply LLC

brother

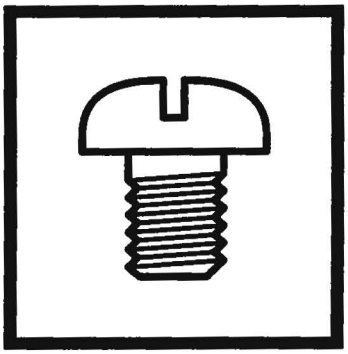

# パーツブック
# PARTS BOOK
# TEILEKATALOG
# LIVRE DES PIECES
# LIBRO DE REFERENCIA DE PIEZAS


**ブラザー工業株式会社**

〒467-8561 名古屋市瑞穂区苗代町15番1号　TEL(052)824-2392

**BROTHER INDUSTRIES, LTD.**

15-1, Naeshiro-cho, Mizuho-ku, Nagoya 467-8561, Japan. Phone: 81-52-824-2177



Printed in Japan / Gedruckt in Japan / Imprimé au Japon / Impreso en Japón

118-291
S95291-101
2001.07. F (1)



From the library of: Superior Sewing Machine & Supply LLC

From the library of: Superior Sewing Machine & Supply LLC